ENGINEERS SPECIAL INSPECTORS PLANNERS SURVEYORS
WESTERN PACIFIC ENGINEERING & SURVEY
PIONEER WAY PROFESSIONAL CENTER
1328 E. HUNTER PLACE
MOSES LAKE, WASHINGTON 98837
OFFICE: (509) 765-1023
FAX: (509) 765-1298

December 23, 2019

LCU, Inc.
Attn: Pat Deneen
P.O. Box 394
Cle Elum, Washington 98922

RECEIVED
JAN 02 2020
Kittitas Co. CDS

SUBJECT: Stormwater Report for Big Creek Development located in Ellensburg, WA
WPES Project No. 17413

Dear Mr. Deneen:

Please find the attached Stormwater Report for the Big Creek Development in Ellensburg, Washington. This report incorporates feedback we have received from Kittitas County Public Works, current site conditions as they exist today and the proposed development. As you know, you will be required to follow all Washington Department of Ecology and Kittitas County Stormwater Standards during construction.

Based on the calculate areas, curve numbers, infiltration values, and predicted 25 and 100-year storm events, the following results have been collected.

During a 25-year storm event, a total of 2,381 cubic feet of runoff will need to be detained. When distributed to each channel along the length of the structure, a maximum ponding depth of 1.75" may be achieved. During a 100-year storm event, all other conditions being kept the same, a total of 4,911 cubic feet of stormwater will need to be detained. This equates to a maximum ponding depth of 3.75" during a 100-year storm. These values of maximum ponding are acceptable, as the current retention structure has a maximum 12" of storage depth.

Sincerely,

Nathaniel D. Nofziger, P.E.
WESTERN PACIFIC ENGINEERING & SURVEY
1328 E. Hunter Place
Moses Lake, Washington 98837
(509) 765-1023

Proposed Development and Existing Site Conditions

The scope of this project is the implementation and development of approximately 3,250 linear feet of roadway, some being classified as county road and other as private roadway. This portion of the project represents the first phase of a multi-phase project to develop the area to the southwest of Lund Lane and the KRD Canal.

Existing site conditions include the gravel roadway currently serving multiple residences, some residential structures, and many agricultural structures. Of note, there is an existing pump house within the proposed county Right-of-Way. Alignment of roadway seeks to minimize potential modification of existing roadway easement or ROW.

Project location is along Lund Lane, where it intersects Nelson Siding Road in Ellensburg, Washington. Project extends Lund Lane and creates an additional private roadway. More specifically, the site is located in the Southeast quarter of Section 29, Township 20 North. Range 14 East, W.M.

The proposed development is classified as a low-use site as defined by the 2019 Stormwater Management Manual for Eastern Washington (SWMMEW). Roan Drive is a county road with an average daily traffic (ADT) count of less than 7,500 vehicles, categorizing it as a low-use site according to Table 5.22: Pollutant Loading Classifications for Solids, Metals, and Oil in Stormwater Runoff Directed to UIC Wells.

The natural topography is generally uniform in grade along the project site with some significant increase in grades to the south of the project site. General site grading is sloping downward in the northeastern direction. The surface of property is covered in a variety of native grasses. The KRD Canal runs northwest to southeast through the project site.

Basin Analysis

After placement of the new roadway, the original drainage flow will be disrupted due to the elevated roadbed design. All stormwater that lands within the established Right of Way (ROW) will be collected and stored until it is able to infiltrate. The native soils are somewhat permeable, but will have limited infiltration prior to the soils becoming saturated due to the high-water table. For areas outside the ROW, runoff will be similar to pre-construction conditions.

For this development it is important that the stormwater runoff from the roadway does not directly flow into the KRD Canal, due to the potential for contaminants. To protect the canal, construction means and methods shall be consistent with the Stormwater Management Manual for Eastern Washington. For the purpose of this stormwater management document, only the stormwater that lands within the Right of Way will be considered.

General Calculation Procedure

When computing the required infiltration and storage areas for the site, a number of design assumptions were made. These assumptions include: Lund Lane and the new roadway will be approximately twenty-six feet wide for the 3,250 feet long roadway, ditch configurations will be with

or without berm, as indicated on the included construction drawings, and the infiltration rate will be established by the least possible infiltration rate.

By quantifying the type of ground cover present on site, a more accurate representation of infiltration and storage is possible. The impervious area, consisting of the roadway covers approximately 1.939 acres. The pervious cover, consisting of the shoulders and berms along the roadway, adds an additional 1.566 acres. In accordance with the Kittitas County Code, the rainfall intensity and time of concentration from a 100-year storm were used. A rainfall volume of 4.5 inches, along with Type 1A hydrograph were used to analyze the volume of stormwater expected from the site.

According to the United States Department of Agriculture's (USDA) Soil Survey, the soils in the area have a Hydraulic Soil Group rating of B. Runoff Curve Number (CN) values can be pulled directly from Table 4.5.2, found in the Stormwater Management Manual for Eastern Washington, published by the Washington State Department of Ecology. For the impervious paved areas, the CN value is 98. For the previous areas, the CN value of 82 for Type-B Dirt environments was chosen. This value is more conservative than utilizing the category of open spaces with less than 50% grassy cover. While the initial construction documents indicate that low-irrigation grasses will likely be placed in these areas, the grasses will not significantly increase the soil permeability.

By utilizing the United States Department of Agriculture's Web Soil Survey tool, a soil map encompassing the project site and the present soils with their respective engineering and physical properties was obtained. Using the median value for the topsoil infiltration rate returned a value of 0.0018 feet per second. Data sheets utilized to determine the soil type and infiltration rates are included in the appendix. To provide a factor of safety, maximum storage depth should not exceed one half of the total storage capacity. Using the current one-foot tall berm height, a maximum of 8,125 ft^3 is available.

Current earthwork design calls for a one-foot tall berm or a natural ditch from roadway grading to be constructed along the roadway. During a 25-year storm event, a total of 2,381 cubic feet of runoff will need to be detained. When distributed to each channel along the length of the structure, a maximum ponding depth of 1.75" may be achieved. During a 100-year storm event, all other conditions being kept the same, a total of 4,911 cubic feet of stormwater will need to be detained. This equates to a maximum ponding depth of 3.75" during a 100-year storm. These values of maximum ponding are acceptable, as the current retention structure has a maximum 12" of storage depth.

Taking all of the above information into consideration, it was determined that for an SCS Type 1A regional storm, the designed stormwater collection system is more than capable of handling the runoff from Lund Lane and the proposed private roadway.

Appendices and Attachments

- Typical Roadway Cross-Section
- USDA Soil Classification
- 25-Year Storm Map
- 100-Year Storm Map
- Stormwater Manual Hydrology Tables
- Infiltration Area Calculations
- Basin Runoff Calculations

TYPICAL ROADWAY SECTION WITHOUT BERM

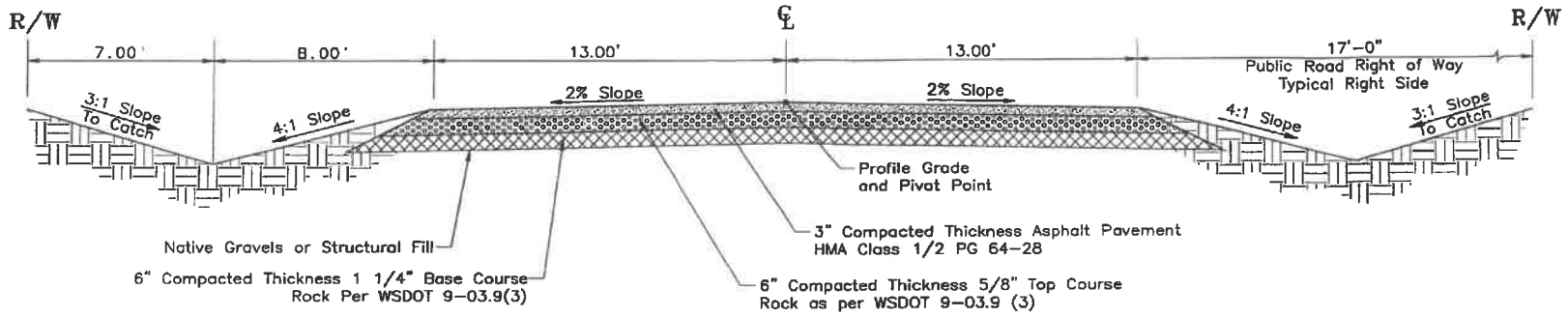

TYPICAL ROADWAY SECTION WITH BERM

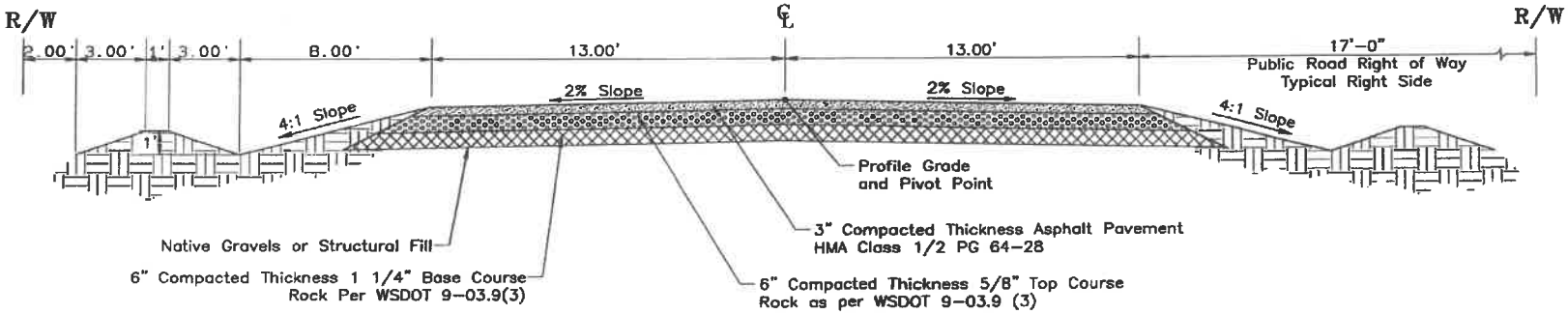

WESTERN PACIFIC
ENGINEERING & SURVEY
A TERRA DEVELOPMENT SERVICES CORPORATION
1328 E. Hunter Place, Moses Lake, Washington
T:(509)765-1023 F:(509)765-1298

No.	Revision	Date	By

LCU, INC.
Big Creek Development
Roadway Cross-Section
Grant County Washington

Designed by NDN
Drawn by Tml/TSL
Checked by NDN
Project No. 17413
Date: December 2019
Scale:
Hor. 1" = N/A
Vert. 1" = N/A
Sec 28, T 20 N, R 14 E

SHEET NO.
1 of 1

File -- N:\17413\Road Design\17413s1.dwg,rev1.pro Date: Mon Dec 23, 2019

Soil Map—Kittitas County Area, Washington

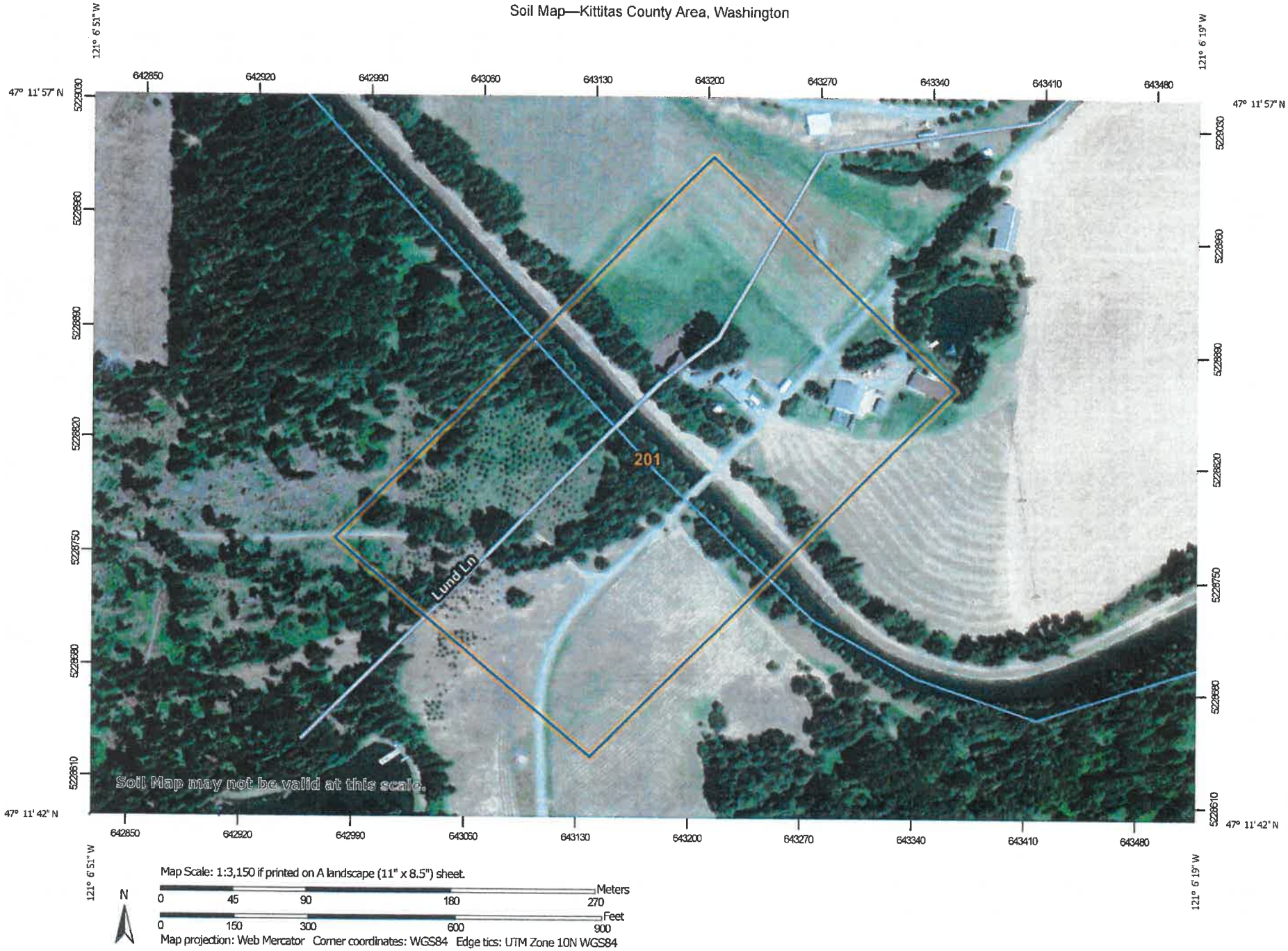

Map Scale: 1:3,150 if printed on A landscape (11" x 8.5") sheet.

N

Meters: 0 45 90 180 270

Feet: 0 150 300 600 900

Map projection: Web Mercator Corner coordinates: WGS84 Edge tics: UTM Zone 10N WGS84

MAP LEGEND

Area of Interest (AOI)
- Area of Interest (AOI)

Soils
- Soil Map Unit Polygons
- Soil Map Unit Lines
- Soil Map Unit Points

Special Point Features
- Blowout
- Borrow Pit
- Clay Spot
- Closed Depression
- Gravel Pit
- Gravelly Spot
- Landfill
- Lava Flow
- Marsh or swamp
- Mine or Quarry
- Miscellaneous Water
- Perennial Water
- Rock Outcrop
- Saline Spot
- Sandy Spot
- Severely Eroded Spot
- Sinkhole
- Slide or Slip
- Sodic Spot
- Spoil Area
- Stony Spot
- Very Stony Spot
- Wet Spot
- Other
- Special Line Features

Water Features
- Streams and Canals

Transportation
- Rails
- Interstate Highways
- US Routes
- Major Roads
- Local Roads

Background
- Aerial Photography

MAP INFORMATION

The soil surveys that comprise your AOI were mapped at 1:24,000.

Warning: Soil Map may not be valid at this scale.

Enlargement of maps beyond the scale of mapping can cause misunderstanding of the detail of mapping and accuracy of soil line placement. The maps do not show the small areas of contrasting soils that could have been shown at a more detailed scale.

Please rely on the bar scale on each map sheet for map measurements.

Source of Map: Natural Resources Conservation Service
Web Soil Survey URL:
Coordinate System: Web Mercator (EPSG:3857)

Maps from the Web Soil Survey are based on the Web Mercator projection, which preserves direction and shape but distorts distance and area. A projection that preserves area, such as the Albers equal-area conic projection, should be used if more accurate calculations of distance or area are required.

This product is generated from the USDA-NRCS certified data as of the version date(s) listed below.

Soil Survey Area: Kittitas County Area, Washington
Survey Area Data: Version 11, Sep 10, 2018

Soil map units are labeled (as space allows) for map scales 1:50,000 or larger.

Date(s) aerial images were photographed: Sep 5, 2014—Aug 28, 2016

The orthophoto or other base map on which the soil lines were compiled and digitized probably differs from the background imagery displayed on these maps. As a result, some minor shifting of map unit boundaries may be evident.

Map Unit Legend

Map Unit Symbol	Map Unit Name	Acres in AOI	Percent of AOI
201	Roslyn ashy sandy loam, 0 to 5 percent slopes	17.0	100.0%
Totals for Area of Interest		**17.0**	**100.0%**

Physical Soil Properties

This table shows estimates of some physical characteristics and features that affect soil behavior. These estimates are given for the layers of each soil in the survey area. The estimates are based on field observations and on test data for these and similar soils.

Depth to the upper and lower boundaries of each layer is indicated.

Particle size is the effective diameter of a soil particle as measured by sedimentation, sieving, or micrometric methods. Particle sizes are expressed as classes with specific effective diameter class limits. The broad classes are sand, silt, and clay, ranging from the larger to the smaller.

Sand as a soil separate consists of mineral soil particles that are 0.05 millimeter to 2 millimeters in diameter. In this table, the estimated sand content of each soil layer is given as a percentage, by weight, of the soil material that is less than 2 millimeters in diameter.

Silt as a soil separate consists of mineral soil particles that are 0.002 to 0.05 millimeter in diameter. In this table, the estimated silt content of each soil layer is given as a percentage, by weight, of the soil material that is less than 2 millimeters in diameter.

Clay as a soil separate consists of mineral soil particles that are less than 0.002 millimeter in diameter. In this table, the estimated clay content of each soil layer is given as a percentage, by weight, of the soil material that is less than 2 millimeters in diameter.

The content of sand, silt, and clay affects the physical behavior of a soil. Particle size is important for engineering and agronomic interpretations, for determination of soil hydrologic qualities, and for soil classification.

The amount and kind of clay affect the fertility and physical condition of the soil and the ability of the soil to adsorb cations and to retain moisture. They influence shrink-swell potential, saturated hydraulic conductivity (Ksat), plasticity, the ease of soil dispersion, and other soil properties. The amount and kind of clay in a soil also affect tillage and earthmoving operations.

Moist bulk density is the weight of soil (ovendry) per unit volume. Volume is measured when the soil is at field moisture capacity, that is, the moisture content at 1/3- or 1/10-bar (33kPa or 10kPa) moisture tension. Weight is determined after the soil is dried at 105 degrees C. In the table, the estimated moist bulk density of each soil horizon is expressed in grams per cubic centimeter of soil material that is less than 2 millimeters in diameter. Bulk density data are used to compute linear extensibility, shrink-swell potential, available water capacity, total pore space, and other soil properties. The moist bulk density of a soil indicates the pore space available for water and roots. Depending on soil texture, a bulk density of more than 1.4 can restrict water storage and root penetration. Moist bulk density is influenced by texture, kind of clay, content of organic matter, and soil structure.

Saturated hydraulic conductivity (Ksat) refers to the ease with which pores in a saturated soil transmit water. The estimates in the table are expressed in terms of micrometers per second. They are based on soil characteristics observed in the field, particularly structure, porosity, and texture. Saturated hydraulic conductivity (Ksat) is considered in the design of soil drainage systems and septic tank absorption fields.

Available water capacity refers to the quantity of water that the soil is capable of storing for use by plants. The capacity for water storage is given in inches of water per inch of soil for each soil layer. The capacity varies, depending on soil properties that affect retention of water. The most important properties are the content of organic matter, soil texture, bulk density, and soil structure. Available water capacity is an important factor in the choice of plants or crops to be grown and in the design and management of irrigation systems. Available water capacity is not an estimate of the quantity of water actually available to plants at any given time.

Linear extensibility refers to the change in length of an unconfined clod as moisture content is decreased from a moist to a dry state. It is an expression of the volume change between the water content of the clod at 1/3- or 1/10-bar tension (33kPa or 10kPa tension) and oven dryness. The volume change is reported in the table as percent change for the whole soil. The amount and type of clay minerals in the soil influence volume change.

Linear extensibility is used to determine the shrink-swell potential of soils. The shrink-swell potential is low if the soil has a linear extensibility of less than 3 percent; moderate if 3 to 6 percent; high if 6 to 9 percent; and very high if more than 9 percent. If the linear extensibility is more than 3, shrinking and swelling can cause damage to buildings, roads, and other structures and to plant roots. Special design commonly is needed.

Organic matter is the plant and animal residue in the soil at various stages of decomposition. In this table, the estimated content of organic matter is expressed as a percentage, by weight, of the soil material that is less than 2 millimeters in diameter. The content of organic matter in a soil can be maintained by returning crop residue to the soil.

Organic matter has a positive effect on available water capacity, water infiltration, soil organism activity, and tilth. It is a source of nitrogen and other nutrients for crops and soil organisms.

Erosion factors are shown in the table as the K factor (Kw and Kf) and the T factor. Erosion factor K indicates the susceptibility of a soil to sheet and rill erosion by water. Factor K is one of six factors used in the Universal Soil Loss Equation (USLE) and the Revised Universal Soil Loss Equation (RUSLE) to predict the average annual rate of soil loss by sheet and rill erosion in tons per acre per year. The estimates are based primarily on percentage of silt, sand, and organic matter and on soil structure and Ksat. Values of K range from 0.02 to 0.69. Other factors being equal, the higher the value, the more susceptible the soil is to sheet and rill erosion by water.

Erosion factor Kw indicates the erodibility of the whole soil. The estimates are modified by the presence of rock fragments.

Erosion factor Kf indicates the erodibility of the fine-earth fraction, or the material less than 2 millimeters in size.

Erosion factor T is an estimate of the maximum average annual rate of soil erosion by wind and/or water that can occur without affecting crop productivity over a sustained period. The rate is in tons per acre per year.

Wind erodibility groups are made up of soils that have similar properties affecting their susceptibility to wind erosion in cultivated areas. The soils assigned to group 1 are the most susceptible to wind erosion, and those assigned to group 8 are the least susceptible. The groups are described in the "National Soil Survey Handbook."

Wind erodibility index is a numerical value indicating the susceptibility of soil to wind erosion, or the tons per acre per year that can be expected to be lost to wind erosion. There is a close correlation between wind erosion and the texture of the surface layer, the size and durability of surface clods, rock fragments, organic matter, and a calcareous reaction. Soil moisture and frozen soil layers also influence wind erosion.

Reference:
United States Department of Agriculture, Natural Resources Conservation Service. National soil survey handbook, title 430-VI. (http://soils.usda.gov)

Report—Physical Soil Properties

Three values are provided to identify the expected Low (L), Representative Value (R), and High (H).

Physical Soil Properties–Kittitas County Area, Washington

Map symbol and soil name	Depth	Sand	Silt	Clay	Moist bulk density	Saturated hydraulic conductivity	Available water capacity	Linear extensibility	Organic matter	Erosion factors			Wind erodibility group	Wind erodibility index
										Kw	Kf	T		
	In	*Pct*	*Pct*	*Pct*	*g/cc*	*micro m/sec*	*In/In*	*Pct*	*Pct*					
201—Roslyn ashy sandy loam, 0 to 5 percent slopes														
Roslyn	0-1	-35-	-50-	0-15- 25	0.10-0.20 -0.30	42.00-373.00-7 05.00	0.30-0.45-0. 60	—	60.0-75.0 -95.0			5	2	134
	1-8	-67-	-23-	5-10- 15	0.85-0.98 -1.00	14.00-28.00-42. 00	0.10-0.12-0. 13	0.0- 1.5- 2.9	0.5- 1.3- 2.0	.24	.24			
	8-15	-67-	-23-	5-10- 15	0.85-0.98 -1.10	4.00-9.00-14.00	0.10-0.12-0. 13	0.0- 1.5- 2.9	0.5- 0.8- 1.0	.28	.28			
	15-37	-44-	-40-	13-17- 20	1.25-1.33 -1.40	4.00-9.00-14.00	0.12-0.15-0. 17	0.0- 1.5- 2.9	0.5- 0.8- 1.0	.37	.37			
	37-49	-46-	-44-	5-10- 15	1.20-1.28 -1.35	4.00-9.00-14.00	0.07-0.11-0. 14	0.0- 1.5- 2.9	0.5- 0.8- 1.0	.32	.49			
	49-60	-46-	-44-	5-10- 15	1.30-1.40 -1.50	4.00-9.00-14.00	0.07-0.11-0. 14	0.0- 1.5- 2.9	0.0- 0.3- 0.5	.24	.49			

Data Source Information

Soil Survey Area: Kittitas County Area, Washington
Survey Area Data: Version 11, Sep 10, 2018

Engineering Properties

This table gives the engineering classifications and the range of engineering properties for the layers of each soil in the survey area.

Hydrologic soil group is a group of soils having similar runoff potential under similar storm and cover conditions. The criteria for determining Hydrologic soil group is found in the National Engineering Handbook, Chapter 7 issued May 2007(http://directives.sc.egov.usda.gov/OpenNonWebContent.aspx?content=17757.wba). Listing HSGs by soil map unit component and not by soil series is a new concept for the engineers. Past engineering references contained lists of HSGs by soil series. Soil series are continually being defined and redefined, and the list of soil series names changes so frequently as to make the task of maintaining a single national list virtually impossible. Therefore, the criteria is now used to calculate the HSG using the component soil properties and no such national series lists will be maintained. All such references are obsolete and their use should be discontinued. Soil properties that influence runoff potential are those that influence the minimum rate of infiltration for a bare soil after prolonged wetting and when not frozen. These properties are depth to a seasonal high water table, saturated hydraulic conductivity after prolonged wetting, and depth to a layer with a very slow water transmission rate. Changes in soil properties caused by land management or climate changes also cause the hydrologic soil group to change. The influence of ground cover is treated independently. There are four hydrologic soil groups, A, B, C, and D, and three dual groups, A/D, B/D, and C/D. In the dual groups, the first letter is for drained areas and the second letter is for undrained areas.

The four hydrologic soil groups are described in the following paragraphs:

Group A. Soils having a high infiltration rate (low runoff potential) when thoroughly wet. These consist mainly of deep, well drained to excessively drained sands or gravelly sands. These soils have a high rate of water transmission.

Group B. Soils having a moderate infiltration rate when thoroughly wet. These consist chiefly of moderately deep or deep, moderately well drained or well drained soils that have moderately fine texture to moderately coarse texture. These soils have a moderate rate of water transmission.

Group C. Soils having a slow infiltration rate when thoroughly wet. These consist chiefly of soils having a layer that impedes the downward movement of water or soils of moderately fine texture or fine texture. These soils have a slow rate of water transmission.

Group D. Soils having a very slow infiltration rate (high runoff potential) when thoroughly wet. These consist chiefly of clays that have a high shrink-swell potential, soils that have a high water table, soils that have a claypan or clay layer at or near the surface, and soils that are shallow over nearly impervious material. These soils have a very slow rate of water transmission.

Depth to the upper and lower boundaries of each layer is indicated.

Texture is given in the standard terms used by the U.S. Department of Agriculture. These terms are defined according to percentages of sand, silt, and clay in the fraction of the soil that is less than 2 millimeters in diameter. "Loam," for example, is soil that is 7 to 27 percent clay, 28 to 50 percent silt, and less than 52 percent sand. If the content of particles coarser than sand is 15 percent or more, an appropriate modifier is added, for example, "gravelly."

Classification of the soils is determined according to the Unified soil classification system (ASTM, 2005) and the system adopted by the American Association of State Highway and Transportation Officials (AASHTO, 2004).

The Unified system classifies soils according to properties that affect their use as construction material. Soils are classified according to particle-size distribution of the fraction less than 3 inches in diameter and according to plasticity index, liquid limit, and organic matter content. Sandy and gravelly soils are identified as GW, GP, GM, GC, SW, SP, SM, and SC; silty and clayey soils as ML, CL, OL, MH, CH, and OH; and highly organic soils as PT. Soils exhibiting engineering properties of two groups can have a dual classification, for example, CL-ML.

The AASHTO system classifies soils according to those properties that affect roadway construction and maintenance. In this system, the fraction of a mineral soil that is less than 3 inches in diameter is classified in one of seven groups from A-1 through A-7 on the basis of particle-size distribution, liquid limit, and plasticity index. Soils in group A-1 are coarse grained and low in content of fines (silt and clay). At the other extreme, soils in group A-7 are fine grained. Highly organic soils are classified in group A-8 on the basis of visual inspection.

If laboratory data are available, the A-1, A-2, and A-7 groups are further classified as A-1-a, A-1-b, A-2-4, A-2-5, A-2-6, A-2-7, A-7-5, or A-7-6. As an additional refinement, the suitability of a soil as subgrade material can be indicated by a group index number. Group index numbers range from 0 for the best subgrade material to 20 or higher for the poorest.

Percentage of rock fragments larger than 10 inches in diameter and 3 to 10 inches in diameter are indicated as a percentage of the total soil on a dry-weight basis. The percentages are estimates determined mainly by converting volume percentage in the field to weight percentage. Three values are provided to identify the expected Low (L), Representative Value (R), and High (H).

Percentage (of soil particles) passing designated sieves is the percentage of the soil fraction less than 3 inches in diameter based on an ovendry weight. The sieves, numbers 4, 10, 40, and 200 (USA Standard Series), have openings of 4.76, 2.00, 0.420, and 0.074 millimeters, respectively. Estimates are based on laboratory tests of soils sampled in the survey area and in nearby areas and on estimates made in the field. Three values are provided to identify the expected Low (L), Representative Value (R), and High (H).

Liquid limit and *plasticity index* (Atterberg limits) indicate the plasticity characteristics of a soil. The estimates are based on test data from the survey area or from nearby areas and on field examination. Three values are provided to identify the expected Low (L), Representative Value (R), and High (H).

References:

American Association of State Highway and Transportation Officials (AASHTO). 2004. Standard specifications for transportation materials and methods of sampling and testing. 24th edition.

American Society for Testing and Materials (ASTM). 2005. Standard classification of soils for engineering purposes. ASTM Standard D2487-00.

Report—Engineering Properties

Absence of an entry indicates that the data were not estimated. The asterisk '*' denotes the representative texture; other possible textures follow the dash. The criteria for determining the hydrologic soil group for individual soil components is found in the National Engineering Handbook, Chapter 7 issued May 2007(http://directives.sc.egov.usda.gov/OpenNonWebContent.aspx?content=17757.wba). Three values are provided to identify the expected Low (L), Representative Value (R), and High (H).

Engineering Properties–Kittitas County Area, Washington

Map unit symbol and soil name	Pct. of map unit	Hydrologic group	Depth	USDA texture	Classification		Pct Fragments		Percentage passing sieve number—				Liquid limit	Plasticity index
					Unified	AASHTO	>10 inches	3-10 inches	4	10	40	200		
			In				*L-R-H*	*L-R-H*	*L-R-H*	*L-R-H*	*L-R-H*	*L-R-H*	*L-R-H*	*L-R-H*
201—Roslyn ashy sandy loam, 0 to 5 percent slopes														
Roslyn	85	B	0-1	Moderately decomposed plant material	PT	A-8	0- 0- 0	0- 0- 0	100-100 -100	100-100 -100	60-75-1 00	50-65- 90	—	—
			1-8	Ashy sandy loam	SM	A-4	0- 0- 0	0- 0- 0	95-98-1 00	90-95-1 00	60-65- 70	35-40- 45	20-28 -35	NP-3 -5
			8-15	Ashy sandy loam	SM	A-4	0- 0- 0	0- 0- 0	95-98-1 00	90-95-1 00	60-65- 70	35-40- 45	20-28 -35	NP-5 -10
			15-37	Loam, gravelly loam	SC-SM	A-4	0- 0- 0	0- 0- 0	70-83- 95	60-75- 90	50-60- 70	35-43- 50	20-25 -30	5-7 -10
			37-49	Very gravelly sandy loam, gravelly loam, gravelly sandy loam	GM, SM, GC-GM, SC-SM	A-1, A-2, A-4	0- 3- 5	0-10- 20	45-63- 80	35-53- 70	20-38- 55	15-33- 50	15-20 -25	NP-3 -5
			49-60	Extremely gravelly loamy sand, extremely gravelly sandy loam, gravelly loam, very gravelly sandy loam	GM, GC-GM, GP-GM	A-1, A-2, A-4	0- 3- 5	0-13- 25	30-50- 70	20-40- 60	10-28- 45	5-23- 40	15-20 -25	NP-3 -5

Data Source Information

Soil Survey Area: Kittitas County Area, Washington
Survey Area Data: Version 11, Sep 10, 2018

Figure 4.10: 25-Year, 24-Hour Isopluvial Map

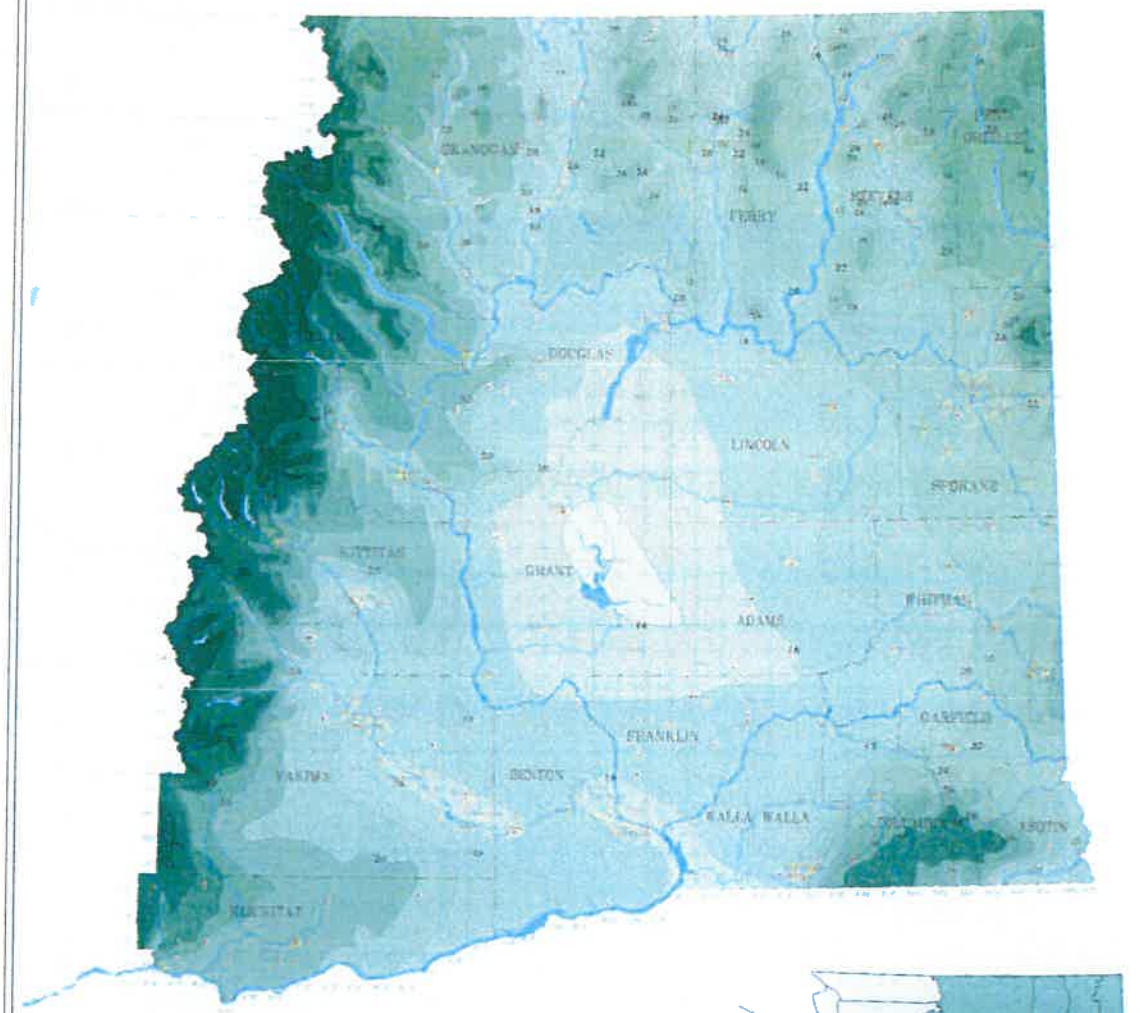

Source: NOAA Atlas 2, Volume IX, 1973
Precipitation in inches

County(2003, 1:24,000)
City(2003, 1:24,000)
Township/Range
Isopluvial(1973, 1:2,000,000)
NOAA/NWS Station(1931-1998)

Source: Miller et. al., 1973

DEPARTMENT OF ECOLOGY
State of Washington

25-Year, 24-Hour Isopluvial Map

Revised March 2005

Please see *http://www.ecy.wa.gov/copyright.html* for copyright notice including permissions, limitation of liability, and disclaimer.

Figure 4.12: 100-Year, 24-Hour Isopluvial Map

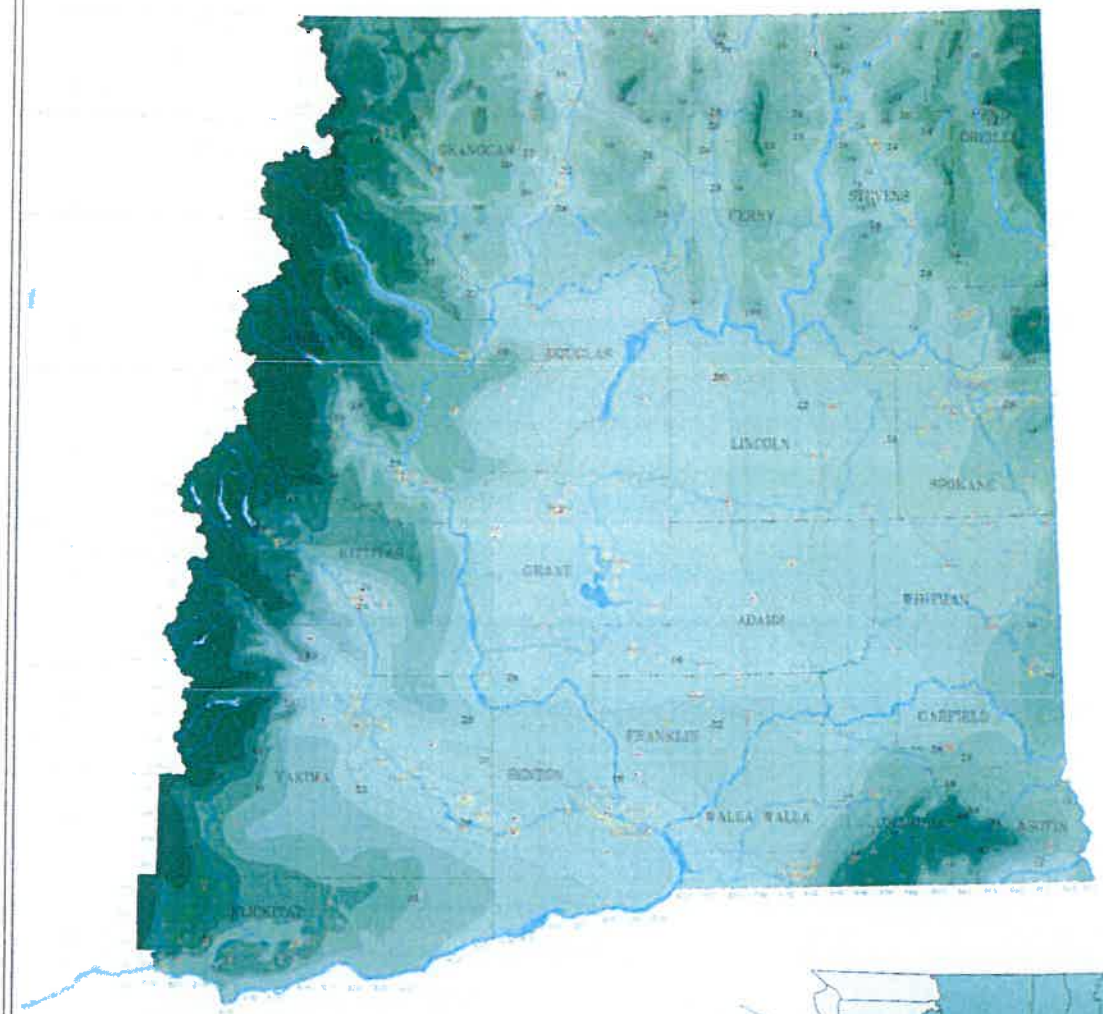

Source: NOAA Atlas 2, Volume IX, 1973
Precipitation in inches

County(2003, 1:24,000)
City(2003, 1:24,000)
Township/Range
Isopluvial(1973, 1:2,000,000)
NOAA/NWS Station(1931-1998)

Source: Miller et. al., 1973

DEPARTMENT OF ECOLOGY
State of Washington

100-Year, 24-Hour Isopluvial Map

Revised March 2005

Please see *http://www.ecy.wa.gov/copyright.html* for copyright notice including permissions, limitation of liability, and disclaimer.

High ground water or shallow bedrock can cause a significant increase in runoff. If either of these conditions exists, it needs to be addressed by the designer. For a more complete discussion of computing weighted CN values, see *Urban Hydrology for Small Watersheds* (USDA, 1986).

Table 4.14: Runoff Curve Numbers (CNs) for Selected Agricultural, Suburban, and Urban Areas

Cover type and hydrologic condition	CNs for hydrologic soil group			
	A	B	C	D
Open space (lawns, parks, golf courses, cemeteries, landscaping, etc.)[a]				
Poor condition (grass cover <50% of the area)	68	79	86	89
Fair condition (grass cover on 50% to 75% of the area)	49	69	79	84
Good condition (grass cover on >75% of the area)	39	61	74	80
Impervious areas				
Open water bodies: lakes, wetlands, ponds etc.	100	100	100	100
Paved parking lots, roofs, driveways, etc. (excluding right-of-way)	98	98	98	98
Permeable pavers and permeable interlocking concrete (assumed as 85% impervious and 15% lawn)				
Fair lawn condition (weighted average CNs)	95	96	97	97
Gravel (including right-of-way)	76	85	89	91
Dirt (including right-of-way)	72	82	87	89
Pasture, grassland, or range-continuous forage for grazing				
Poor condition (ground cover <50% or heavily grazed with no mulch)	68	79	86	89
Fair condition (ground cover 50% to 75% and not heavily grazed)	49	69	79	84
Good condition (ground cover >75% and lightly or only occasionally grazed)	39	61	74	80
Cultivated agricultural lands				
Row Crops (good) e.g., corn, sugar beets, soy beans	64	75	82	85
Small Grain (good) e.g., wheat, barley, flax	60	72	80	84
Meadow				
Continuous grass, protected from grazing and generally mowed for hay	30	58	71	78
Brush (brush-weed-grass mixture with brush the major element)				

Table 4.14: Runoff Curve Numbers (CNs) for Selected Agricultural, Suburban, and Urban Areas (continued)

Cover type and hydrologic condition	CNs for hydrologic soil group			
	A	B	C	D
Poor (<50% ground cover)	48	67	77	83
Fair (50% to 75% ground cover)	35	56	70	77
Good (>75% ground cover)	30[b]	48	65	73
Woods-grass combination (orchard or tree farm)[c]				
Poor	57	73	82	86
Fair	43	65	76	82
Good	32	58	72	79
Woods				
Poor (Forest litter, small trees, and brush destroyed by heavy grazing or regular burning)	45	66	77	83
Fair (Woods are grazed but not burned, and some forest litter covers the soil)	36	60	73	79
Good (Woods are protected from grazing, and litter and brush adequately cover the soil)	30	55	70	77
Herbaceous (mixture of grass, weeds, and low-growing brush, with brush the minor element)				
Poor (<30% ground cover)	n/a[d]	80	87	93
Fair (30% to 70% ground cover)		71	81	89
Good (>70% ground cover)		62	74	85
Sagebrush with grass understory				
Poor (<30% ground cover)	n/a[d]	67	80	85
Fair (30% to 70% ground cover)		51	63	70
Good (>70% ground cover)		35	47	55

[a]Composite CNs may be computed for other combinations of open space cover type.

[b]Actual CN is < 30; use CN = 30 for runoff computations.

[c]The indicated CNs were computed for areas with 50% woods and 50% grass (pasture) cover. Other combinations of conditions may be computed from the CNs for woods and pasture.

[d]CNs have not been developed for hydrologic soil group A.

Stormwater Area Calcs

Length of Roadway	3250	ft
Width of Roadway	26	ft
Shoulder Width	16	ft
Ditch Right Width	6	ft
Ditch Left Width	2	ft

Impervious Area	84,500	sq. ft.	1.939	ac
Pervious Area	68,215	sq. ft.	1.566	ac
Total Area	152,715	sq. ft.	3.505	ac

Infiltration Area	32500	sq. ft.
Storage Volume	8125.0	cu. ft.
Assumed Max Depth	6	inches

SCS Type 1A Regional Storm - Central Basin (25-Year Recurrence)

Area (acres) = 3.505 | P (inches) = 3.5 | d_t(min)= 6 | Tc (min) = 5 | Infiltration Area (ft²)= 32500.0

W= 0.375 | Max Volume= 2381.09

Pervious Area (acres) = 1.566 | CN = 82 | S = 2.20 | 0.2S = 0.44 | Infiltration Rate (cf/min/ft^2)= 0.00177

Impervious Area (acres) = 1.939 | CN = 98 | S = 0.20 | 0.2S = 0.04 | Total Disp= 345.150000

1 Time Increment	2.0 Time Hours	2 Time (min)	3 Rainfall Distribution (Fraction)	4 Incremental Rainfall (inches)	5 Accum. Rainfall (inches)	6 Pervious Acc. Run (inches)	7 Pervious Inc. Run (inches)	8 Impervious Acc. Run (inches)	9 Impervious Inc. Run (inches)	10 Total Runoff (inches)	11 Instant Flow (inches)	12 Design Flow Rate (cfs)	13 Incremental Flow (cf)	14 Drywell Disp. Volume (cf)	15 Accum. Storage (cf)
1	0.0	0	0.000	0.000	0.000	0.000	0.000	0.000	0.000	0.000	0.000	0.000	0.0	0.0000	0.0
2	0.1	6	0.002	0.007	0.007	0.000	0.000	0.000	0.000	0.000	0.000	0.000	0.0	0.0000	0.0
3	0.2	12	0.002	0.007	0.014	0.000	0.000	0.000	0.000	0.000	0.000	0.000	0.0	0.0000	0.0
4	0.3	18	0.002	0.007	0.021	0.000	0.000	0.000	0.000	0.000	0.000	0.000	0.0	0.0000	0.0
5	0.4	24	0.002	0.007	0.028	0.000	0.000	0.000	0.000	0.000	0.000	0.000	0.0	0.0000	0.0
6	0.5	30	0.002	0.007	0.035	0.000	0.000	0.000	0.000	0.000	0.000	0.000	0.0	0.0000	0.0
7	0.6	36	0.002	0.007	0.042	0.000	0.000	0.000	0.000	0.000	0.000	0.000	0.0	0.0000	0.0
8	0.7	42	0.002	0.007	0.049	0.000	0.000	0.000	0.000	0.000	0.000	0.000	0.0	0.0180	0.0
9	0.8	48	0.002	0.007	0.056	0.000	0.000	0.001	0.001	0.000	0.006	0.002	0.8	0.8373	0.0
10	0.9	54	0.002	0.007	0.063	0.000	0.000	0.002	0.001	0.001	0.014	0.008	3.0	2.9665	0.0
11	1.0	60	0.002	0.007	0.070	0.000	0.000	0.004	0.001	0.001	0.022	0.016	5.6	5.6495	0.0
12	1.1	66	0.003	0.011	0.081	0.000	0.000	0.006	0.003	0.002	0.055	0.037	13.4	13.3796	0.0
13	1.2	72	0.003	0.011	0.091	0.000	0.000	0.010	0.003	0.002	0.067	0.055	19.9	19.8507	0.0
14	1.3	78	0.003	0.011	0.102	0.000	0.000	0.014	0.004	0.002	0.078	0.068	24.6	24.6222	0.0
15	1.4	84	0.003	0.011	0.112	0.000	0.000	0.018	0.004	0.002	0.088	0.079	28.6	28.6002	0.0
16	1.5	90	0.003	0.011	0.123	0.000	0.000	0.023	0.005	0.003	0.097	0.089	32.1	32.0667	0.0
17	1.6	96	0.003	0.011	0.133	0.000	0.000	0.029	0.005	0.003	0.104	0.098	35.1	35.1373	0.0
18	1.7	102	0.003	0.011	0.144	0.000	0.000	0.034	0.006	0.003	0.111	0.105	37.9	37.8784	0.0
19	1.8	108	0.003	0.011	0.154	0.000	0.000	0.040	0.006	0.003	0.117	0.112	40.3	40.3377	0.0
20	1.9	114	0.003	0.011	0.165	0.000	0.000	0.047	0.006	0.003	0.123	0.118	42.6	42.5531	0.0
21	2.0	120	0.003	0.011	0.175	0.000	0.000	0.053	0.007	0.004	0.128	0.124	44.6	44.5559	0.0
22	2.1	126	0.003	0.011	0.186	0.000	0.000	0.060	0.007	0.004	0.133	0.129	46.4	46.3726	0.0
23	2.2	132	0.003	0.011	0.196	0.000	0.000	0.067	0.007	0.004	0.137	0.133	48.0	48.0255	0.0
24	2.3	138	0.004	0.014	0.210	0.000	0.000	0.077	0.010	0.005	0.189	0.156	56.0	55.9843	0.0
25	2.4	144	0.003	0.011	0.221	0.000	0.000	0.084	0.007	0.004	0.146	0.164	59.1	59.1281	0.0
26	2.5	150	0.003	0.011	0.231	0.000	0.000	0.092	0.008	0.004	0.149	0.151	54.5	54.5239	0.0
27	2.6	156	0.003	0.011	0.242	0.000	0.000	0.099	0.008	0.004	0.152	0.151	54.2	54.1978	0.0
28	2.7	162	0.003	0.011	0.252	0.000	0.000	0.107	0.008	0.004	0.154	0.152	54.9	54.8779	0.0
29	2.8	168	0.004	0.014	0.266	0.000	0.000	0.118	0.011	0.006	0.210	0.175	62.9	62.8853	0.0
30	2.9	174	0.003	0.011	0.277	0.000	0.000	0.126	0.008	0.005	0.160	0.182	65.6	65.6399	0.0
31	3.0	180	0.003	0.011	0.287	0.000	0.000	0.135	0.008	0.005	0.162	0.166	59.9	59.8947	0.0
32	3.1	186	0.003	0.011	0.298	0.000	0.000	0.143	0.008	0.005	0.164	0.164	59.0	59.0093	0.0
33	3.2	192	0.003	0.011	0.308	0.000	0.000	0.151	0.008	0.005	0.166	0.165	59.3	59.3016	0.0
34	3.3	198	0.003	0.011	0.319	0.000	0.000	0.160	0.009	0.005	0.168	0.166	59.9	59.8543	0.0
35	3.4	204	0.004	0.014	0.333	0.000	0.000	0.172	0.012	0.006	0.226	0.189	68.1	68.1026	0.0
36	3.5	210	0.003	0.011	0.343	0.000	0.000	0.180	0.009	0.005	0.171	0.196	70.6	70.6498	0.0
37	3.6	216	0.003	0.011	0.354	0.000	0.000	0.189	0.009	0.005	0.173	0.178	64.1	64.0802	0.0
38	3.7	222	0.004	0.014	0.368	0.000	0.000	0.201	0.012	0.007	0.232	0.196	70.7	70.6636	0.0
39	3.8	228	0.004	0.014	0.382	0.000	0.000	0.213	0.012	0.007	0.234	0.224	80.6	80.6369	0.0
40	3.9	234	0.003	0.011	0.392	0.000	0.000	0.222	0.009	0.005	0.177	0.210	75.7	75.6873	0.0
41	4.0	240	0.004	0.014	0.406	0.000	0.000	0.234	0.012	0.007	0.238	0.208	74.9	74.9038	0.0
42	4.1	246	0.004	0.014	0.420	0.000	0.000	0.247	0.012	0.007	0.239	0.231	83.1	83.1267	0.0
43	4.2	252	0.003	0.011	0.431	0.000	0.000	0.256	0.009	0.005	0.181	0.215	77.5	77.4804	0.0
44	4.3	258	0.004	0.014	0.445	0.000	0.000	0.268	0.012	0.007	0.242	0.212	76.5	76.4682	0.0
45	4.4	264	0.004	0.014	0.459	0.000	0.000	0.281	0.012	0.007	0.246	0.236	85.0	85.0496	0.0
46	4.5	270	0.004	0.014	0.473	0.001	0.000	0.293	0.013	0.007	0.250	0.245	88.2	88.2441	0.0
47	4.6	276	0.004	0.014	0.487	0.001	0.001	0.306	0.013	0.007	0.254	0.250	90.1	90.1244	0.0
48	4.7	282	0.004	0.014	0.501	0.002	0.001	0.318	0.013	0.007	0.258	0.255	91.6	91.6402	0.0
49	4.8	288	0.004	0.014	0.515	0.003	0.001	0.331	0.013	0.007	0.262	0.258	93.0	93.0312	0.0
50	4.9	294	0.005	0.018	0.532	0.004	0.001	0.347	0.016	0.009	0.332	0.287	103.4	103.3809	0.0
51	5.0	300	0.004	0.014	0.546	0.005	0.001	0.360	0.013	0.008	0.269	0.297	107.0	107.0335	0.0
52	5.1	306	0.005	0.018	0.564	0.007	0.002	0.376	0.016	0.010	0.341	0.303	109.2	109.2339	0.0
53	5.2	312	0.004	0.014	0.578	0.008	0.002	0.389	0.013	0.008	0.277	0.308	110.8	110.7805	0.0
54	5.3	318	0.005	0.018	0.595	0.010	0.002	0.405	0.016	0.010	0.350	0.312	112.4	112.3736	0.0
55	5.4	324	0.005	0.018	0.613	0.013	0.002	0.421	0.016	0.010	0.355	0.343	123.3	123.3467	0.0
56	5.5	330	0.005	0.018	0.630	0.015	0.003	0.438	0.016	0.010	0.360	0.354	127.3	127.3464	0.0
57	5.6	336	0.005	0.018	0.648	0.018	0.003	0.454	0.016	0.010	0.364	0.360	129.6	129.5622	0.0
58	5.7	342	0.005	0.018	0.665	0.021	0.003	0.470	0.016	0.010	0.368	0.365	131.3	131.2938	0.0
59	5.8	348	0.005	0.018	0.683	0.024	0.003	0.487	0.016	0.011	0.373	0.369	132.9	132.8680	0.0
60	5.9	354	0.005	0.018	0.700	0.028	0.003	0.503	0.017	0.011	0.377	0.373	134.4	134.3687	0.0
61	6.0	360	0.006	0.021	0.721	0.032	0.004	0.523	0.020	0.013	0.457	0.406	146.2	146.1562	0.0
62	6.1	366	0.006	0.021	0.742	0.037	0.005	0.543	0.020	0.013	0.463	0.446	160.7	160.7066	0.0
63	6.2	372	0.006	0.021	0.763	0.042	0.005	0.563	0.020	0.013	0.468	0.461	165.8	165.7926	0.0
64	6.3	378	0.006	0.021	0.784	0.047	0.005	0.583	0.020	0.013	0.473	0.468	168.5	168.4648	0.0
65	6.4	384	0.007	0.025	0.809	0.053	0.006	0.606	0.023	0.016	0.558	0.504	181.3	181.3054	0.0
66	6.5	390	0.006	0.021	0.830	0.059	0.006	0.627	0.020	0.014	0.483	0.516	185.9	185.9344	0.0
67	6.6	396	0.006	0.021	0.851	0.065	0.006	0.647	0.020	0.014	0.488	0.493	177.7	177.6503	0.0
68	6.7	402	0.006	0.021	0.872	0.071	0.006	0.667	0.020	0.014	0.493	0.491	176.8	176.8073	0.0
69	6.8	408	0.006	0.021	0.893	0.078	0.006	0.687	0.020	0.014	0.497	0.494	177.8	177.7882	0.0
70	6.9	414	0.006	0.021	0.914	0.084	0.007	0.707	0.020	0.014	0.501	0.498	179.2	179.1904	0.0
71	7.0	420	0.007	0.025	0.938	0.092	0.008	0.731	0.024	0.017	0.590	0.534	192.1	192.0861	0.0
72	7.1	426	0.007	0.025	0.963	0.101	0.008	0.755	0.024	0.017	0.595	0.578	208.0	208.0147	0.0
73	7.2	432	0.008	0.028	0.991	0.111	0.010	0.782	0.027	0.019	0.687	0.625	225.1	225.0702	0.0
74	7.3	438	0.008	0.028	1.019	0.121	0.010	0.809	0.027	0.020	0.693	0.674	242.6	242.5675	0.0
75	7.4	444	0.009	0.032	1.050	0.133	0.012	0.839	0.031	0.022	0.788	0.724	260.6	260.5558	0.0
76	7.5	450	0.010	0.035	1.085	0.147	0.014	0.873	0.034	0.025	0.884	0.808	290.8	290.8140	0.0
77	7.6	456	0.021	0.074	1.159	0.178	0.031	0.945	0.072	0.053	1.886	1.241	446.7	345.1500	101.5
78	7.7	462	0.024	0.084	1.243	0.215	0.038	1.027	0.082	0.062	2.201	1.843	663.4	345.1500	419.7
79	7.8	468	0.024	0.084	1.327	0.256	0.040	1.110	0.082	0.064	2.245	2.128	765.9	345.1500	840.5
80	7.9	474	0.024	0.084	1.411	0.298	0.043	1.192	0.083	0.065	2.285	2.230	803.0	345.1500	1298.3
81	8.0	480	0.022	0.077	1.488	0.339	0.041	1.268	0.076	0.060	2.127	2.212	796.3	345.1500	1749.5
82	8.1	486	0.014	0.049	1.537	0.366	0.027	1.316	0.048	0.039	1.368	1.864	670.9	345.1500	2075.3
83	8.2	492	0.013	0.046	1.582	0.391	0.026	1.361	0.045	0.036	1.281	1.459	525.4	345.1500	2255.5
84	8.3	498	0.010	0.035	1.617	0.411	0.020	1.395	0.035	0.028	0.991	1.217	438.0	345.1500	2348.4
85	8.4	504	0.010	0.035	1.652	0.432	0.020	1.430	0.035	0.028	0.996	1.050	377.9	345.1500	2381.1
86	8.5	510	0.008	0.028	1.680	0.448	0.016	1.458	0.028	0.023	0.801	0.936	337.1	337.1061	2381.1

87	8.6	516	0.009	0.032	1.712	0.467	0.019	1.489	0.031	0.026	0.905	0.874	314.5	314.5240	2381.1
88	8.7	522	0.009	0.032	1.743	0.486	0.019	1.520	0.031	0.026	0.909	0.898	323.4	323.4216	2381.1
89	8.8	528	0.007	0.025	1.768	0.501	0.015	1.544	0.024	0.020	0.709	0.831	299.3	299.2626	2381.1
90	8.9	534	0.008	0.028	1.796	0.518	0.017	1.572	0.028	0.023	0.813	0.779	280.4	280.3633	2381.1
91	9.0	540	0.007	0.025	1.820	0.533	0.015	1.596	0.024	0.020	0.714	0.767	276.3	276.2739	2381.1
92	9.1	546	0.007	0.025	1.845	0.549	0.015	1.620	0.024	0.020	0.716	0.728	262.1	262.1276	2381.1
93	9.2	552	0.006	0.021	1.866	0.562	0.013	1.641	0.021	0.017	0.615	0.681	245.3	245.2907	2381.1
94	9.3	558	0.006	0.021	1.887	0.575	0.013	1.662	0.021	0.017	0.617	0.632	227.7	227.6968	2381.1
95	9.4	564	0.006	0.021	1.908	0.589	0.013	1.683	0.021	0.017	0.618	0.621	223.7	223.6995	2381.1
96	9.5	570	0.005	0.018	1.925	0.600	0.011	1.700	0.017	0.015	0.516	0.581	209.1	209.1336	2381.1
97	9.6	576	0.006	0.021	1.946	0.613	0.014	1.721	0.021	0.018	0.621	0.572	205.8	205.8473	2381.1
98	9.7	582	0.005	0.018	1.964	0.625	0.011	1.738	0.017	0.015	0.519	0.570	205.3	205.3168	2381.1
99	9.8	588	0.006	0.021	1.985	0.639	0.014	1.759	0.021	0.018	0.624	0.571	205.5	205.5280	2381.1
100	9.9	594	0.005	0.018	2.002	0.650	0.012	1.776	0.017	0.015	0.521	0.572	205.9	205.8627	2381.1
101	10.0	600	0.005	0.018	2.020	0.662	0.012	1.794	0.017	0.015	0.522	0.534	192.2	192.1804	2381.1
102	10.1	606	0.005	0.018	2.037	0.673	0.012	1.811	0.017	0.015	0.523	0.525	189.0	189.0084	2381.1
103	10.2	612	0.005	0.018	2.055	0.685	0.012	1.828	0.017	0.015	0.523	0.524	188.5	188.4603	2381.1
104	10.3	618	0.005	0.018	2.072	0.697	0.012	1.846	0.017	0.015	0.524	0.524	188.6	188.5648	2381.1
105	10.4	624	0.004	0.014	2.086	0.706	0.009	1.860	0.014	0.012	0.420	0.485	174.6	174.6390	2381.1
106	10.5	630	0.005	0.018	2.104	0.718	0.012	1.877	0.017	0.015	0.526	0.476	171.4	171.3691	2381.1
107	10.6	636	0.005	0.018	2.121	0.730	0.012	1.894	0.017	0.015	0.527	0.514	185.0	184.9502	2381.1
108	10.7	642	0.004	0.014	2.135	0.739	0.010	1.908	0.014	0.012	0.422	0.484	174.3	174.3202	2381.1
109	10.8	648	0.005	0.018	2.153	0.751	0.012	1.926	0.017	0.015	0.528	0.477	171.9	171.8661	2381.1
110	10.9	654	0.005	0.018	2.170	0.763	0.012	1.943	0.017	0.015	0.529	0.516	185.7	185.7071	2381.1
111	11.0	660	0.004	0.014	2.184	0.773	0.010	1.957	0.014	0.012	0.424	0.486	175.1	175.0718	2381.1
112	11.1	666	0.004	0.014	2.198	0.782	0.010	1.971	0.014	0.012	0.424	0.440	158.3	158.2757	2381.1
113	11.2	672	0.005	0.018	2.216	0.795	0.012	1.988	0.017	0.015	0.531	0.468	168.6	168.5641	2381.1
114	11.3	678	0.004	0.014	2.230	0.804	0.010	2.002	0.014	0.012	0.425	0.476	171.3	171.2890	2381.1
115	11.4	684	0.004	0.014	2.244	0.814	0.010	2.016	0.014	0.012	0.426	0.438	157.8	157.7716	2381.1
116	11.5	690	0.004	0.014	2.258	0.824	0.010	2.030	0.014	0.012	0.426	0.429	154.5	154.5251	2381.1
117	11.6	696	0.004	0.014	2.272	0.834	0.010	2.044	0.014	0.012	0.427	0.427	153.8	153.8448	2381.1
118	11.7	702	0.004	0.014	2.286	0.844	0.010	2.058	0.014	0.012	0.427	0.427	153.8	153.8046	2381.1
119	11.8	708	0.004	0.014	2.300	0.853	0.010	2.072	0.014	0.012	0.428	0.428	153.9	153.9231	2381.1
120	11.9	714	0.003	0.011	2.310	0.861	0.007	2.082	0.010	0.009	0.321	0.388	139.6	139.6162	2381.1
121	12.0	720	0.004	0.014	2.324	0.871	0.010	2.096	0.014	0.012	0.429	0.378	136.1	136.1498	2381.1
122	12.1	726	0.004	0.014	2.338	0.881	0.010	2.110	0.014	0.012	0.429	0.416	149.9	149.8559	2381.1
123	12.2	732	0.003	0.011	2.349	0.888	0.007	2.120	0.010	0.009	0.322	0.386	138.9	138.8998	2381.1
124	12.3	738	0.004	0.014	2.363	0.898	0.010	2.134	0.014	0.012	0.430	0.379	136.3	136.2679	2381.1
125	12.4	744	0.004	0.014	2.377	0.908	0.010	2.148	0.014	0.012	0.430	0.417	150.2	150.2220	2381.1
126	12.5	750	0.004	0.014	2.391	0.918	0.010	2.162	0.014	0.012	0.431	0.427	153.8	153.8305	2381.1
127	12.6	756	0.004	0.014	2.405	0.928	0.010	2.176	0.014	0.012	0.431	0.430	154.9	154.8514	2381.1
128	12.7	762	0.003	0.011	2.415	0.936	0.008	2.186	0.010	0.009	0.324	0.391	140.6	140.6475	2381.1
129	12.8	768	0.004	0.014	2.429	0.946	0.010	2.200	0.014	0.012	0.432	0.381	137.2	137.1984	2381.1
130	12.9	774	0.003	0.011	2.440	0.954	0.008	2.211	0.010	0.009	0.324	0.379	136.4	136.4119	2381.1
131	13.0	780	0.004	0.014	2.454	0.964	0.010	2.225	0.014	0.012	0.433	0.379	136.3	136.3153	2381.1
132	13.1	786	0.004	0.014	2.468	0.974	0.010	2.238	0.014	0.012	0.433	0.419	151.0	150.9920	2381.1
133	13.2	792	0.003	0.011	2.478	0.982	0.008	2.249	0.010	0.009	0.325	0.389	140.1	140.1330	2381.1
134	13.3	798	0.004	0.014	2.492	0.992	0.010	2.263	0.014	0.012	0.434	0.382	137.5	137.5156	2381.1
135	13.4	804	0.004	0.014	2.506	1.002	0.010	2.277	0.014	0.012	0.434	0.421	151.6	151.5978	2381.1
136	13.5	810	0.003	0.011	2.517	1.010	0.008	2.287	0.010	0.009	0.326	0.390	140.5	140.5497	2381.1
137	13.6	816	0.003	0.011	2.527	1.018	0.008	2.298	0.010	0.009	0.326	0.342	123.2	123.1944	2381.1
138	13.7	822	0.004	0.014	2.541	1.028	0.010	2.312	0.014	0.012	0.435	0.371	133.6	133.6138	2381.1
139	13.8	828	0.003	0.011	2.552	1.036	0.008	2.322	0.010	0.009	0.327	0.379	136.3	136.2884	2381.1
140	13.9	834	0.004	0.014	2.566	1.046	0.010	2.336	0.014	0.012	0.436	0.381	137.0	137.0494	2381.1
141	14.0	840	0.003	0.011	2.576	1.054	0.008	2.346	0.010	0.009	0.327	0.381	137.3	137.3082	2381.1
142	14.1	846	0.003	0.011	2.587	1.062	0.008	2.357	0.010	0.009	0.327	0.341	122.7	122.7202	2381.1
143	14.2	852	0.004	0.014	2.600	1.072	0.010	2.371	0.014	0.012	0.437	0.372	133.9	133.8840	2381.1
144	14.3	858	0.003	0.011	2.611	1.080	0.008	2.381	0.010	0.009	0.328	0.380	136.7	136.7419	2381.1
145	14.4	864	0.003	0.011	2.621	1.088	0.008	2.392	0.010	0.009	0.328	0.341	122.8	122.7698	2381.1
146	14.5	870	0.004	0.014	2.635	1.099	0.010	2.405	0.014	0.012	0.438	0.373	134.1	134.1176	2381.1
147	14.6	876	0.003	0.011	2.646	1.106	0.008	2.416	0.010	0.009	0.329	0.381	137.0	137.0198	2381.1
148	14.7	882	0.003	0.011	2.656	1.114	0.008	2.426	0.010	0.009	0.329	0.342	123.0	123.0258	2381.1
149	14.8	888	0.004	0.014	2.670	1.125	0.011	2.440	0.014	0.012	0.439	0.373	134.4	134.3974	2381.1
150	14.9	894	0.003	0.011	2.681	1.133	0.008	2.451	0.010	0.009	0.329	0.381	137.3	137.3040	2381.1
151	15.0	900	0.003	0.011	2.691	1.141	0.008	2.461	0.010	0.009	0.330	0.342	123.3	123.2790	2381.1
152	15.1	906	0.003	0.011	2.702	1.149	0.008	2.472	0.010	0.009	0.330	0.333	119.8	119.8265	2381.1
153	15.2	912	0.004	0.014	2.716	1.159	0.011	2.486	0.014	0.012	0.440	0.372	133.9	133.8704	2381.1
154	15.3	918	0.003	0.011	2.726	1.167	0.008	2.496	0.010	0.009	0.330	0.382	137.4	137.4431	2381.1
155	15.4	924	0.003	0.011	2.737	1.175	0.008	2.506	0.010	0.009	0.330	0.343	123.5	123.5440	2381.1
156	15.5	930	0.003	0.011	2.747	1.183	0.008	2.517	0.010	0.009	0.331	0.334	120.1	120.1213	2381.1
157	15.6	936	0.003	0.011	2.758	1.191	0.008	2.527	0.010	0.009	0.331	0.331	119.3	119.3174	2381.1
158	15.7	942	0.004	0.014	2.772	1.202	0.011	2.541	0.014	0.012	0.441	0.372	134.1	134.0674	2381.1
159	15.8	948	0.003	0.011	2.782	1.210	0.008	2.552	0.010	0.009	0.331	0.383	137.8	137.8144	2381.1
160	15.9	954	0.003	0.011	2.793	1.218	0.008	2.562	0.010	0.009	0.331	0.344	123.9	123.9105	2381.1
161	16.0	960	0.003	0.011	2.803	1.226	0.008	2.573	0.010	0.009	0.332	0.335	120.5	120.4847	2381.1
162	16.1	966	0.003	0.011	2.814	1.234	0.008	2.583	0.010	0.009	0.332	0.332	119.7	119.6780	2381.1
163	16.2	972	0.003	0.011	2.824	1.242	0.008	2.594	0.010	0.009	0.332	0.332	119.5	119.5258	2381.1
164	16.3	978	0.003	0.011	2.835	1.250	0.008	2.604	0.010	0.009	0.332	0.332	119.5	119.5369	2381.1
165	16.4	984	0.003	0.011	2.845	1.259	0.008	2.614	0.010	0.009	0.332	0.332	119.6	119.5885	2381.1
166	16.5	990	0.003	0.011	2.856	1.267	0.008	2.625	0.010	0.009	0.333	0.332	119.6	119.6498	2381.1
167	16.6	996	0.003	0.011	2.866	1.275	0.008	2.635	0.010	0.009	0.333	0.333	119.7	119.7132	2381.1
168	16.7	1002	0.003	0.011	2.877	1.283	0.008	2.646	0.010	0.009	0.333	0.333	119.8	119.7768	2381.1
169	16.8	1008	0.003	0.011	2.887	1.291	0.008	2.656	0.010	0.009	0.333	0.333	119.8	119.8402	2381.1
170	16.9	1014	0.003	0.011	2.898	1.299	0.008	2.667	0.010	0.009	0.333	0.333	119.9	119.9031	2381.1
171	17.0	1020	0.003	0.011	2.908	1.307	0.008	2.677	0.010	0.009	0.333	0.333	120.0	119.9657	2381.1
172	17.1	1026	0.003	0.011	2.919	1.316	0.008	2.688	0.010	0.009	0.334	0.333	120.0	120.0278	2381.1
173	17.2	1032	0.003	0.011	2.929	1.324	0.008	2.698	0.010	0.009	0.334	0.334	120.1	120.0894	2381.1
174	17.3	1038	0.003	0.011	2.940	1.332	0.008	2.709	0.010	0.009	0.334	0.334	120.2	120.1507	2381.1
175	17.4	1044	0.003	0.011	2.950	1.340	0.008	2.719	0.010	0.009	0.334	0.334	120.2	120.2115	2381.1
176	17.5	1050	0.003	0.011	2.961	1.348	0.008	2.729	0.010	0.009	0.334	0.334	120.3	120.2719	2381.1
177	17.6	1056	0.003	0.011	2.971	1.357	0.008	2.740	0.010	0.009	0.334	0.334	120.3	120.3319	2381.1
178	17.7	1062	0.002	0.007	2.978	1.362	0.005	2.747	0.007	0.006	0.223	0.293	105.3	105.3339	2381.1
179	17.8	1068	0.003	0.011	2.989	1.370	0.008	2.757	0.010	0.009	0.335	0.282	101.6	101.6214	2381.1
180	17.9	1074	0.003	0.011	2.999	1.379	0.008	2.768	0.010	0.009	0.335	0.322	115.8	115.7875	2381.1
181	18.0	1080	0.003	0.011	3.010	1.387	0.008	2.778	0.010	0.009	0.335	0.332	119.4	119.3729	2381.1
182	18.1	1086	0.003	0.011	3.020	1.395	0.008	2.789	0.010	0.009	0.335	0.334	120.3	120.3127	2381.1
183	18.2	1092	0.002	0.007	3.027	1.401	0.006	2.796	0.007	0.006	0.224	0.293	105.5	105.4995	2381.1
184	18.3	1098	0.003	0.011	3.038	1.409	0.008	2.806	0.010	0.009	0.335	0.283	101.8	101.8320	2381.1

185	18.4	1104	0.003	0.011	3.048	1.417	0.008	2.817	0.010	0.009	0.336	0.322	116.0	116.0421	2381.1
186	18.5	1110	0.003	0.011	3.059	1.426	0.008	2.827	0.010	0.009	0.336	0.332	119.6	119.6371	2381.1
187	18.6	1116	0.002	0.007	3.066	1.431	0.006	2.834	0.007	0.006	0.224	0.293	105.5	105.4607	2381.1
188	18.7	1122	0.003	0.011	3.076	1.439	0.008	2.844	0.010	0.010	0.336	0.283	102.0	101.9515	2381.1
189	18.8	1128	0.003	0.011	3.087	1.448	0.008	2.855	0.010	0.010	0.336	0.323	116.2	116.2263	2381.1
190	18.9	1134	0.002	0.007	3.094	1.453	0.006	2.862	0.007	0.006	0.224	0.291	104.7	104.7007	2381.1
191	19.0	1140	0.003	0.011	3.104	1.462	0.008	2.872	0.010	0.010	0.336	0.283	101.9	101.8536	2381.1
192	19.1	1146	0.003	0.011	3.115	1.470	0.008	2.883	0.010	0.010	0.337	0.323	116.3	116.3116	2381.1
193	19.2	1152	0.002	0.007	3.122	1.476	0.006	2.890	0.007	0.006	0.224	0.291	104.8	104.8131	2381.1
194	19.3	1158	0.003	0.011	3.132	1.484	0.008	2.900	0.010	0.010	0.337	0.283	102.0	101.9721	2381.1
195	19.4	1164	0.002	0.007	3.139	1.490	0.006	2.907	0.007	0.006	0.225	0.281	101.3	101.2843	2381.1
196	19.5	1170	0.003	0.011	3.150	1.498	0.008	2.918	0.010	0.010	0.337	0.281	101.1	101.1457	2381.1
197	19.6	1176	0.003	0.011	3.160	1.506	0.008	2.928	0.010	0.010	0.337	0.323	116.3	116.3091	2381.1
198	19.7	1182	0.002	0.007	3.167	1.512	0.006	2.935	0.007	0.006	0.225	0.292	105.0	104.9570	2381.1
199	19.8	1188	0.003	0.011	3.178	1.520	0.008	2.946	0.010	0.010	0.337	0.284	102.2	102.1518	2381.1
200	19.9	1194	0.002	0.007	3.185	1.526	0.006	2.953	0.007	0.006	0.225	0.282	101.5	101.4722	2381.1
201	20.0	1200	0.003	0.011	3.195	1.534	0.008	2.963	0.010	0.010	0.338	0.281	101.3	101.3348	2381.1
202	20.1	1206	0.002	0.007	3.202	1.540	0.006	2.970	0.007	0.006	0.225	0.281	101.3	101.3219	2381.1
203	20.2	1212	0.003	0.011	3.213	1.549	0.008	2.980	0.010	0.010	0.338	0.282	101.4	101.3508	2381.1
204	20.3	1218	0.002	0.007	3.220	1.554	0.006	2.987	0.007	0.006	0.225	0.282	101.4	101.3793	2381.1
205	20.4	1224	0.002	0.007	3.227	1.560	0.006	2.994	0.007	0.006	0.225	0.239	86.2	86.1993	2381.1
206	20.5	1230	0.003	0.011	3.237	1.568	0.008	3.005	0.010	0.010	0.338	0.271	97.6	97.6442	2381.1
207	20.6	1236	0.002	0.007	3.244	1.574	0.006	3.012	0.007	0.006	0.226	0.279	100.5	100.5264	2381.1
208	20.7	1242	0.003	0.011	3.255	1.582	0.008	3.022	0.010	0.010	0.338	0.281	101.3	101.2782	2381.1
209	20.8	1248	0.002	0.007	3.262	1.588	0.006	3.029	0.007	0.006	0.226	0.282	101.5	101.4869	2381.1
210	20.9	1254	0.002	0.007	3.269	1.594	0.006	3.036	0.007	0.006	0.226	0.240	86.3	86.3263	2381.1
211	21.0	1260	0.003	0.011	3.279	1.602	0.009	3.047	0.010	0.010	0.339	0.272	97.8	97.8004	2381.1
212	21.1	1266	0.002	0.007	3.286	1.608	0.006	3.054	0.007	0.006	0.226	0.280	100.7	100.6894	2381.1
213	21.2	1272	0.002	0.007	3.293	1.614	0.006	3.061	0.007	0.006	0.226	0.239	86.2	86.1841	2381.1
214	21.3	1278	0.003	0.011	3.304	1.622	0.009	3.071	0.010	0.010	0.339	0.272	97.8	97.8360	2381.1
215	21.4	1284	0.002	0.007	3.311	1.628	0.006	3.078	0.007	0.006	0.226	0.280	100.8	100.7691	2381.1
216	21.5	1290	0.002	0.007	3.318	1.633	0.006	3.085	0.007	0.006	0.226	0.240	86.3	86.2604	2381.1
217	21.6	1296	0.003	0.011	3.328	1.642	0.009	3.096	0.010	0.010	0.339	0.272	97.9	97.9252	2381.1
218	21.7	1302	0.002	0.007	3.335	1.648	0.006	3.103	0.007	0.006	0.226	0.280	100.9	100.8612	2381.1
219	21.8	1308	0.002	0.007	3.342	1.653	0.006	3.109	0.007	0.006	0.226	0.240	86.3	86.3390	2381.1
220	21.9	1314	0.002	0.007	3.349	1.659	0.006	3.116	0.007	0.006	0.226	0.230	82.7	82.7242	2381.1
221	22.0	1320	0.002	0.007	3.356	1.665	0.006	3.123	0.007	0.006	0.227	0.227	81.8	81.8361	2381.1
222	22.1	1326	0.003	0.011	3.367	1.673	0.009	3.134	0.010	0.010	0.340	0.269	96.9	96.9272	2381.1
223	22.2	1332	0.002	0.007	3.374	1.679	0.006	3.141	0.007	0.006	0.227	0.280	100.7	100.7194	2381.1
224	22.3	1338	0.002	0.007	3.381	1.685	0.006	3.148	0.007	0.006	0.227	0.240	86.4	86.3892	2381.1
225	22.4	1344	0.002	0.007	3.388	1.691	0.006	3.155	0.007	0.006	0.227	0.230	82.8	82.8220	2381.1
226	22.5	1350	0.002	0.007	3.395	1.696	0.006	3.162	0.007	0.006	0.227	0.228	81.9	81.9455	2381.1
227	22.6	1356	0.002	0.007	3.402	1.702	0.006	3.169	0.007	0.006	0.227	0.227	81.7	81.7417	2381.1
228	22.7	1362	0.002	0.007	3.409	1.708	0.006	3.176	0.007	0.006	0.227	0.227	81.7	81.7059	2381.1
229	22.8	1368	0.002	0.007	3.416	1.713	0.006	3.183	0.007	0.006	0.227	0.227	81.7	81.7120	2381.1
230	22.9	1374	0.002	0.007	3.423	1.719	0.006	3.190	0.007	0.006	0.227	0.227	81.7	81.7286	2381.1
231	23.0	1380	0.002	0.007	3.430	1.725	0.006	3.197	0.007	0.006	0.227	0.227	81.7	81.7478	2381.1
232	23.1	1386	0.002	0.007	3.437	1.731	0.006	3.204	0.007	0.006	0.227	0.227	81.8	81.7675	2381.1
233	23.2	1392	0.002	0.007	3.444	1.736	0.006	3.211	0.007	0.006	0.227	0.227	81.8	81.7873	2381.1
234	23.3	1398	0.002	0.007	3.451	1.742	0.006	3.218	0.007	0.006	0.227	0.227	81.8	81.8070	2381.1
235	23.4	1404	0.002	0.007	3.458	1.748	0.006	3.225	0.007	0.006	0.227	0.227	81.8	81.8267	2381.1
236	23.5	1410	0.002	0.007	3.465	1.754	0.006	3.232	0.007	0.006	0.227	0.227	81.8	81.8463	2381.1
237	23.6	1416	0.002	0.007	3.472	1.760	0.006	3.239	0.007	0.006	0.227	0.227	81.9	81.8658	2381.1
238	23.7	1422	0.002	0.007	3.479	1.765	0.006	3.246	0.007	0.006	0.228	0.227	81.9	81.8853	2381.1
239	23.8	1428	0.002	0.007	3.486	1.771	0.006	3.253	0.007	0.006	0.228	0.228	81.9	81.9047	2381.1
240	23.9	1434	0.002	0.007	3.493	1.777	0.006	3.259	0.007	0.006	0.228	0.228	81.9	81.9240	2381.1
241	24.0	1440	0.002	0.007	3.500	1.783	0.006	3.266	0.007	0.006	0.228	0.228	81.9	81.9432	2381.1
														Max Storage Req=	2381.1 C.F.

SCS Type 1A Regional Storm - Central Basin (100-Year Recurrence)

Area (acres) = 3.505 | P (inches) = 4.5 | d_t (min) = 6 | Tc (min) = 5 | Infiltration Area (ft²) = 32500.0

W= 0.375 | Max Volume= 4910.63

Pervious Area (acres) = 1.566 | CN = 82 | S = 2.20 | 0.2S = 0.44 | Infiltration Rate (cf/min/ft^2)= 0.00177

Impervious Area (acres) = 1.939 | CN = 98 | S = 0.20 | 0.2S = 0.04 | Total Disp= 345.150000

1 Time Increment	2.0 Time Hours	2 Time (min)	3 Rainfall Distribution (Fraction)	4 Incremental Rainfall (inches)	5 Accum. Rainfall (inches)	6 Pervious Acc. Run (inches)	7 Pervious Inc. Run (inches)	8 Impervious Acc. Run (inches)	9 Impervious Inc. Run (inches)	10 Total Runoff (inches)	11 Instant Flow (inches)	12 Design Flow Rate (cfs)	13 Incremental Flow (cf)	14 Drywell Disp. Volume (cf)	15 Accum. Storage (cf)
1	0.0	0	0.000	0.000	0.000	0.000	0.000	0.000	0.000	0.000	0.000	0.000	0.0	0.0000	0.0
2	0.1	6	0.002	0.009	0.009	0.000	0.000	0.000	0.000	0.000	0.000	0.000	0.0	0.0000	0.0
3	0.2	12	0.002	0.009	0.018	0.000	0.000	0.000	0.000	0.000	0.000	0.000	0.0	0.0000	0.0
4	0.3	18	0.002	0.009	0.027	0.000	0.000	0.000	0.000	0.000	0.000	0.000	0.0	0.0000	0.0
5	0.4	24	0.002	0.009	0.036	0.000	0.000	0.000	0.000	0.000	0.000	0.000	0.0	0.0000	0.0
6	0.5	30	0.002	0.009	0.045	0.000	0.000	0.000	0.000	0.000	0.002	0.001	0.2	0.2218	0.0
7	0.6	36	0.002	0.009	0.054	0.000	0.000	0.001	0.001	0.000	0.014	0.006	2.2	2.1670	0.0
8	0.7	42	0.002	0.009	0.063	0.000	0.000	0.002	0.001	0.001	0.027	0.017	6.1	6.0606	0.0
9	0.8	48	0.002	0.009	0.072	0.000	0.000	0.004	0.002	0.001	0.038	0.029	10.3	10.3133	0.0
10	0.9	54	0.002	0.009	0.081	0.000	0.000	0.007	0.002	0.001	0.048	0.040	14.3	14.2859	0.0
11	1.0	60	0.002	0.009	0.090	0.000	0.000	0.010	0.003	0.002	0.057	0.050	17.9	17.8723	0.0
12	1.1	66	0.003	0.014	0.104	0.000	0.000	0.015	0.005	0.003	0.101	0.072	25.9	25.8970	0.0
13	1.2	72	0.003	0.014	0.117	0.000	0.000	0.021	0.006	0.003	0.117	0.100	35.9	35.9238	0.0
14	1.3	78	0.003	0.014	0.131	0.000	0.000	0.027	0.007	0.004	0.130	0.118	42.4	42.3710	0.0
15	1.4	84	0.003	0.014	0.144	0.000	0.000	0.035	0.007	0.004	0.142	0.132	47.4	47.3912	0.0
16	1.5	90	0.003	0.014	0.158	0.000	0.000	0.042	0.008	0.004	0.152	0.143	51.6	51.6141	0.0
17	1.6	96	0.003	0.014	0.171	0.000	0.000	0.051	0.008	0.005	0.161	0.154	55.3	55.2701	0.0
18	1.7	102	0.003	0.014	0.185	0.000	0.000	0.059	0.009	0.005	0.169	0.162	58.5	58.4750	0.0
19	1.8	108	0.003	0.014	0.198	0.000	0.000	0.068	0.009	0.005	0.176	0.170	61.3	61.3049	0.0
20	1.9	114	0.003	0.014	0.212	0.000	0.000	0.078	0.009	0.005	0.183	0.177	63.8	63.8176	0.0
21	2.0	120	0.003	0.014	0.225	0.000	0.000	0.087	0.010	0.005	0.188	0.183	66.1	66.0591	0.0
22	2.1	126	0.003	0.014	0.239	0.000	0.000	0.097	0.010	0.005	0.193	0.189	68.1	68.0672	0.0
23	2.2	132	0.003	0.014	0.252	0.000	0.000	0.107	0.010	0.006	0.198	0.194	69.9	69.8732	0.0
24	2.3	138	0.004	0.018	0.270	0.000	0.000	0.121	0.014	0.008	0.270	0.224	80.7	80.7181	0.0
25	2.4	144	0.003	0.014	0.284	0.000	0.000	0.132	0.011	0.006	0.207	0.235	84.7	84.6576	0.0
26	2.5	150	0.003	0.014	0.297	0.000	0.000	0.143	0.011	0.006	0.210	0.215	77.5	77.5457	0.0
27	2.6	156	0.003	0.014	0.311	0.000	0.000	0.154	0.011	0.006	0.214	0.213	76.6	76.6288	0.0
28	2.7	162	0.003	0.014	0.324	0.000	0.000	0.165	0.011	0.006	0.216	0.214	77.2	77.1880	0.0
29	2.8	168	0.004	0.018	0.342	0.000	0.000	0.180	0.015	0.008	0.292	0.244	88.0	87.9740	0.0
30	2.9	174	0.003	0.014	0.356	0.000	0.000	0.191	0.011	0.006	0.222	0.254	91.4	91.4373	0.0
31	3.0	180	0.003	0.014	0.369	0.000	0.000	0.202	0.011	0.006	0.224	0.231	83.1	83.0881	0.0
32	3.1	186	0.003	0.014	0.383	0.000	0.000	0.214	0.012	0.006	0.226	0.227	81.6	81.5540	0.0
33	3.2	192	0.003	0.014	0.396	0.000	0.000	0.226	0.012	0.006	0.228	0.227	81.7	81.6830	0.0
34	3.3	198	0.003	0.014	0.410	0.000	0.000	0.237	0.012	0.006	0.230	0.228	82.2	82.1910	0.0
35	3.4	204	0.004	0.018	0.428	0.000	0.000	0.253	0.016	0.009	0.309	0.259	93.2	93.2099	0.0
36	3.5	210	0.003	0.014	0.441	0.000	0.000	0.265	0.012	0.007	0.233	0.268	96.4	96.4441	0.0
37	3.6	216	0.003	0.014	0.455	0.000	0.000	0.277	0.012	0.007	0.236	0.243	87.5	87.4745	0.0
38	3.7	222	0.004	0.018	0.473	0.001	0.000	0.293	0.016	0.009	0.321	0.270	97.1	97.0660	0.0
39	3.8	228	0.004	0.018	0.491	0.001	0.001	0.309	0.016	0.009	0.327	0.310	111.8	111.7715	0.0
40	3.9	234	0.003	0.014	0.504	0.002	0.001	0.322	0.012	0.007	0.250	0.294	105.8	105.8333	0.0
41	4.0	240	0.004	0.018	0.522	0.003	0.001	0.338	0.016	0.010	0.338	0.294	105.8	105.8002	0.0
42	4.1	246	0.004	0.018	0.540	0.004	0.001	0.354	0.016	0.010	0.344	0.329	118.5	118.5213	0.0
43	4.2	252	0.003	0.014	0.554	0.006	0.001	0.367	0.012	0.007	0.262	0.309	111.4	111.3761	0.0
44	4.3	258	0.004	0.018	0.572	0.008	0.002	0.383	0.017	0.010	0.354	0.308	110.9	110.8925	0.0
45	4.4	264	0.004	0.018	0.590	0.010	0.002	0.400	0.017	0.010	0.359	0.344	123.9	123.8919	0.0
46	4.5	270	0.004	0.018	0.608	0.012	0.002	0.417	0.017	0.010	0.364	0.357	128.5	128.5322	0.0
47	4.6	276	0.004	0.018	0.626	0.015	0.003	0.433	0.017	0.010	0.369	0.364	131.0	131.0349	0.0
48	4.7	282	0.004	0.018	0.644	0.017	0.003	0.450	0.017	0.011	0.373	0.369	133.0	132.9584	0.0
49	4.8	288	0.004	0.018	0.662	0.020	0.003	0.467	0.017	0.011	0.378	0.374	134.7	134.6947	0.0
50	4.9	294	0.005	0.023	0.684	0.025	0.004	0.488	0.021	0.014	0.479	0.415	149.3	149.3443	0.0
51	5.0	300	0.004	0.018	0.702	0.028	0.004	0.505	0.017	0.011	0.388	0.429	154.3	154.3268	0.0
52	5.1	306	0.005	0.023	0.725	0.033	0.005	0.527	0.021	0.014	0.491	0.437	157.2	157.1666	0.0
53	5.2	312	0.004	0.018	0.743	0.037	0.004	0.544	0.017	0.011	0.397	0.442	159.1	159.1097	0.0
54	5.3	318	0.005	0.023	0.765	0.042	0.005	0.565	0.021	0.014	0.502	0.447	161.1	161.0870	0.0
55	5.4	324	0.005	0.023	0.788	0.048	0.006	0.586	0.021	0.014	0.507	0.490	176.5	176.5003	0.0
56	5.5	330	0.005	0.023	0.810	0.054	0.006	0.608	0.021	0.015	0.513	0.505	181.9	181.9035	0.0
57	5.6	336	0.005	0.023	0.833	0.060	0.006	0.629	0.022	0.015	0.519	0.513	184.8	184.7523	0.0
58	5.7	342	0.005	0.023	0.855	0.066	0.006	0.651	0.022	0.015	0.524	0.519	186.9	186.9132	0.0
59	5.8	348	0.005	0.023	0.878	0.073	0.007	0.673	0.022	0.015	0.529	0.525	188.9	188.8556	0.0
60	5.9	354	0.005	0.023	0.900	0.080	0.007	0.694	0.022	0.015	0.534	0.530	190.7	190.6991	0.0
61	6.0	360	0.006	0.027	0.927	0.089	0.009	0.720	0.026	0.018	0.647	0.575	207.1	207.0968	0.0
62	6.1	366	0.006	0.027	0.954	0.098	0.009	0.746	0.026	0.018	0.654	0.632	227.4	227.3639	0.0
63	6.2	372	0.006	0.027	0.981	0.107	0.009	0.773	0.026	0.019	0.660	0.651	234.2	234.1974	0.0
64	6.3	378	0.006	0.027	1.008	0.117	0.010	0.799	0.026	0.019	0.666	0.660	237.6	237.6106	0.0
65	6.4	384	0.007	0.032	1.040	0.129	0.012	0.829	0.031	0.022	0.785	0.709	255.3	255.3136	0.0
66	6.5	390	0.006	0.027	1.067	0.139	0.011	0.855	0.026	0.019	0.679	0.726	261.5	261.4582	0.0
67	6.6	396	0.006	0.027	1.094	0.150	0.011	0.882	0.026	0.019	0.685	0.693	249.5	249.4534	0.0
68	6.7	402	0.006	0.027	1.121	0.161	0.011	0.908	0.026	0.020	0.690	0.689	247.9	247.9325	0.0
69	6.8	408	0.006	0.027	1.148	0.173	0.011	0.934	0.026	0.020	0.695	0.692	249.0	248.9853	0.0
70	6.9	414	0.006	0.027	1.175	0.185	0.012	0.961	0.026	0.020	0.700	0.696	250.6	250.6366	0.0
71	7.0	420	0.007	0.032	1.206	0.199	0.014	0.992	0.031	0.023	0.823	0.745	268.3	268.3239	0.0
72	7.1	426	0.007	0.032	1.238	0.213	0.014	1.022	0.031	0.023	0.830	0.806	290.2	290.2066	0.0
73	7.2	432	0.008	0.036	1.274	0.230	0.017	1.058	0.035	0.027	0.956	0.871	313.6	313.5725	0.0
74	7.3	438	0.008	0.036	1.310	0.247	0.017	1.093	0.035	0.027	0.964	0.937	337.5	337.4934	0.0
75	7.4	444	0.009	0.041	1.350	0.267	0.020	1.133	0.040	0.031	1.093	1.006	362.0	345.1500	16.8
76	7.5	450	0.010	0.045	1.395	0.290	0.023	1.177	0.044	0.035	1.225	1.121	403.4	345.1500	75.1
77	7.6	456	0.021	0.095	1.490	0.340	0.050	1.270	0.093	0.074	2.607	1.717	618.2	345.1500	348.1
78	7.7	462	0.024	0.108	1.598	0.400	0.060	1.376	0.106	0.086	3.032	2.544	915.8	345.1500	918.7
79	7.8	468	0.024	0.108	1.706	0.463	0.063	1.483	0.107	0.087	3.082	2.929	1054.3	345.1500	1627.9
80	7.9	474	0.024	0.108	1.814	0.529	0.066	1.590	0.107	0.089	3.128	3.061	1102.0	345.1500	2384.8
81	8.0	480	0.022	0.099	1.913	0.592	0.063	1.688	0.098	0.082	2.904	3.027	1089.8	345.1500	3129.5
82	8.1	486	0.014	0.063	1.976	0.633	0.041	1.750	0.062	0.053	1.865	2.545	916.3	345.1500	3700.6
83	8.2	492	0.013	0.059	2.034	0.671	0.039	1.808	0.058	0.049	1.743	1.989	716.1	345.1500	4071.5
84	8.3	498	0.010	0.045	2.079	0.701	0.030	1.853	0.045	0.038	1.347	1.656	596.2	345.1500	4322.5
85	8.4	504	0.010	0.045	2.124	0.732	0.030	1.897	0.045	0.038	1.353	1.427	513.6	345.1500	4491.0
86	8.5	510	0.008	0.036	2.160	0.756	0.025	1.933	0.036	0.031	1.087	1.272	457.8	345.1500	4603.6

87	8.6	516	0.009	0.041	2.201	0.784	0.028	1.973	0.040	0.035	1.226	1.185	426.7	345.1500	4685.2
88	8.7	522	0.009	0.041	2.241	0.812	0.028	2.013	0.040	0.035	1.231	1.218	438.4	345.1500	4778.4
89	8.8	528	0.007	0.032	2.273	0.834	0.022	2.045	0.031	0.027	0.960	1.126	405.3	345.1500	4838.6
90	8.9	534	0.008	0.036	2.309	0.860	0.025	2.080	0.036	0.031	1.100	1.054	379.5	345.1500	4872.9
91	9.0	540	0.007	0.032	2.340	0.882	0.022	2.112	0.031	0.027	0.965	1.038	373.7	345.1500	4901.4
92	9.1	546	0.007	0.032	2.372	0.905	0.023	2.143	0.031	0.027	0.967	0.984	354.3	345.1500	4910.6
93	9.2	552	0.006	0.027	2.399	0.924	0.019	2.170	0.027	0.024	0.831	0.921	331.4	331.3830	4910.6
94	9.3	558	0.006	0.027	2.426	0.944	0.020	2.197	0.027	0.024	0.833	0.854	307.4	307.4482	4910.6
95	9.4	564	0.006	0.027	2.453	0.963	0.020	2.224	0.027	0.024	0.834	0.839	301.9	301.8969	4910.6
96	9.5	570	0.005	0.023	2.475	0.980	0.016	2.246	0.022	0.020	0.696	0.784	282.1	282.1129	4910.6
97	9.6	576	0.006	0.027	2.502	0.999	0.020	2.273	0.027	0.024	0.837	0.771	277.5	277.5486	4910.6
98	9.7	582	0.005	0.023	2.525	1.016	0.017	2.295	0.022	0.020	0.699	0.769	276.7	276.7198	4910.6
99	9.8	588	0.006	0.027	2.552	1.036	0.020	2.322	0.027	0.024	0.840	0.769	276.9	276.8808	4910.6
100	9.9	594	0.005	0.023	2.574	1.053	0.017	2.344	0.022	0.020	0.701	0.770	277.2	277.2225	4910.6
101	10.0	600	0.005	0.023	2.597	1.069	0.017	2.367	0.022	0.020	0.702	0.719	258.7	258.6952	4910.6
102	10.1	606	0.005	0.023	2.619	1.086	0.017	2.389	0.022	0.020	0.703	0.706	254.3	254.3283	4910.6
103	10.2	612	0.005	0.023	2.642	1.103	0.017	2.411	0.022	0.020	0.704	0.704	253.5	253.4973	4910.6
104	10.3	618	0.005	0.023	2.664	1.120	0.017	2.434	0.022	0.020	0.705	0.704	253.5	253.5463	4910.6
105	10.4	624	0.004	0.018	2.682	1.134	0.014	2.452	0.018	0.016	0.565	0.652	234.7	234.7463	4910.6
106	10.5	630	0.005	0.023	2.705	1.151	0.017	2.474	0.022	0.020	0.706	0.640	230.3	230.2706	4910.6
107	10.6	636	0.005	0.023	2.727	1.168	0.017	2.497	0.022	0.020	0.707	0.690	248.4	248.4374	4910.6
108	10.7	642	0.004	0.018	2.745	1.181	0.014	2.514	0.018	0.016	0.567	0.650	234.1	234.0883	4910.6
109	10.8	648	0.005	0.023	2.768	1.199	0.017	2.537	0.022	0.020	0.709	0.641	230.7	230.7158	4910.6
110	10.9	654	0.005	0.023	2.790	1.216	0.017	2.559	0.022	0.020	0.710	0.692	249.2	249.2169	4910.6
111	11.0	660	0.004	0.018	2.808	1.230	0.014	2.577	0.018	0.016	0.568	0.652	234.9	234.8763	4910.6
112	11.1	666	0.004	0.018	2.826	1.243	0.014	2.595	0.018	0.016	0.569	0.590	212.3	212.2814	4910.6
113	11.2	672	0.005	0.023	2.849	1.261	0.017	2.617	0.022	0.020	0.712	0.628	226.0	226.0107	4910.6
114	11.3	678	0.004	0.018	2.867	1.275	0.014	2.635	0.018	0.016	0.570	0.638	229.6	229.6035	4910.6
115	11.4	684	0.004	0.018	2.885	1.289	0.014	2.653	0.018	0.016	0.571	0.587	211.4	211.4268	4910.6
116	11.5	690	0.004	0.018	2.903	1.303	0.014	2.671	0.018	0.016	0.571	0.575	207.0	207.0216	4910.6
117	11.6	696	0.004	0.018	2.921	1.317	0.014	2.689	0.018	0.016	0.572	0.572	206.1	206.0578	4910.6
118	11.7	702	0.004	0.018	2.939	1.331	0.014	2.707	0.018	0.016	0.572	0.572	206.0	205.9527	4910.6
119	11.8	708	0.004	0.018	2.957	1.345	0.014	2.725	0.018	0.016	0.573	0.572	206.1	206.0606	4910.6
120	11.9	714	0.003	0.014	2.970	1.355	0.011	2.738	0.013	0.012	0.430	0.519	186.9	186.8677	4910.6
121	12.0	720	0.004	0.018	2.988	1.370	0.014	2.756	0.018	0.016	0.574	0.506	182.2	182.1844	4910.6
122	12.1	726	0.004	0.018	3.006	1.384	0.014	2.774	0.018	0.016	0.574	0.557	200.5	200.4797	4910.6
123	12.2	732	0.003	0.014	3.020	1.394	0.011	2.788	0.013	0.012	0.431	0.516	185.8	185.7853	4910.6
124	12.3	738	0.004	0.018	3.038	1.409	0.014	2.806	0.018	0.016	0.575	0.506	182.2	182.2230	4910.6
125	12.4	744	0.004	0.018	3.056	1.423	0.014	2.824	0.018	0.016	0.575	0.558	200.8	200.8391	4910.6
126	12.5	750	0.004	0.018	3.074	1.437	0.014	2.841	0.018	0.016	0.576	0.571	205.6	205.6177	4910.6
127	12.6	756	0.004	0.018	3.092	1.451	0.014	2.859	0.018	0.016	0.576	0.575	206.9	206.9354	4910.6
128	12.7	762	0.003	0.014	3.105	1.462	0.011	2.873	0.013	0.012	0.432	0.522	187.9	187.9167	4910.6
129	12.8	768	0.004	0.018	3.123	1.476	0.014	2.891	0.018	0.016	0.577	0.509	183.3	183.2675	4910.6
130	12.9	774	0.003	0.014	3.137	1.487	0.011	2.904	0.013	0.012	0.433	0.506	182.2	182.1834	4910.6
131	13.0	780	0.004	0.018	3.155	1.502	0.014	2.922	0.018	0.016	0.578	0.506	182.0	182.0158	4910.6
132	13.1	786	0.004	0.018	3.173	1.516	0.014	2.940	0.018	0.016	0.578	0.560	201.6	201.5718	4910.6
133	13.2	792	0.003	0.014	3.186	1.527	0.011	2.954	0.013	0.012	0.434	0.520	187.0	187.0410	4910.6
134	13.3	798	0.004	0.018	3.204	1.541	0.014	2.971	0.018	0.016	0.579	0.510	183.5	183.5086	4910.6
135	13.4	804	0.004	0.018	3.222	1.556	0.014	2.989	0.018	0.016	0.579	0.562	202.3	202.2601	4910.6
136	13.5	810	0.003	0.014	3.236	1.567	0.011	3.003	0.013	0.012	0.435	0.521	187.5	187.4861	4910.6
137	13.6	816	0.003	0.014	3.249	1.578	0.011	3.016	0.013	0.012	0.435	0.456	164.3	164.3054	4910.6
138	13.7	822	0.004	0.018	3.267	1.592	0.015	3.034	0.018	0.016	0.580	0.495	178.2	178.1669	4910.6
139	13.8	828	0.003	0.014	3.281	1.603	0.011	3.048	0.013	0.012	0.436	0.505	181.7	181.7039	4910.6
140	13.9	834	0.004	0.018	3.299	1.618	0.015	3.066	0.018	0.016	0.581	0.507	182.7	182.6828	4910.6
141	14.0	840	0.003	0.014	3.312	1.629	0.011	3.079	0.013	0.012	0.436	0.508	183.0	182.9978	4910.6
142	14.1	846	0.003	0.014	3.326	1.640	0.011	3.093	0.013	0.012	0.436	0.454	163.5	163.5281	4910.6
143	14.2	852	0.004	0.018	3.344	1.654	0.015	3.110	0.018	0.016	0.582	0.495	178.4	178.3709	4910.6
144	14.3	858	0.003	0.014	3.357	1.665	0.011	3.124	0.013	0.012	0.437	0.506	182.1	182.1500	4910.6
145	14.4	864	0.003	0.014	3.371	1.676	0.011	3.137	0.013	0.012	0.437	0.454	163.5	163.5116	4910.6
146	14.5	870	0.004	0.018	3.389	1.691	0.015	3.155	0.018	0.016	0.583	0.496	178.6	178.5927	4910.6
147	14.6	876	0.003	0.014	3.402	1.702	0.011	3.169	0.013	0.012	0.438	0.507	182.4	182.4295	4910.6
148	14.7	882	0.003	0.014	3.416	1.713	0.011	3.182	0.013	0.012	0.438	0.455	163.8	163.7718	4910.6
149	14.8	888	0.004	0.018	3.434	1.728	0.015	3.200	0.018	0.017	0.584	0.497	178.9	178.8777	4910.6
150	14.9	894	0.003	0.014	3.447	1.739	0.011	3.214	0.013	0.012	0.438	0.508	182.7	182.7190	4910.6
151	15.0	900	0.003	0.014	3.461	1.750	0.011	3.227	0.013	0.012	0.438	0.456	164.0	164.0294	4910.6
152	15.1	906	0.003	0.014	3.474	1.761	0.011	3.241	0.013	0.012	0.439	0.443	159.4	159.4117	4910.6
153	15.2	912	0.004	0.018	3.492	1.776	0.015	3.258	0.018	0.017	0.585	0.495	178.1	178.0650	4910.6
154	15.3	918	0.003	0.014	3.506	1.787	0.011	3.272	0.013	0.012	0.439	0.508	182.8	182.7911	4910.6
155	15.4	924	0.003	0.014	3.519	1.798	0.011	3.285	0.013	0.012	0.439	0.456	164.3	164.2812	4910.6
156	15.5	930	0.003	0.014	3.533	1.809	0.011	3.299	0.013	0.012	0.439	0.444	159.7	159.7066	4910.6
157	15.6	936	0.003	0.014	3.546	1.821	0.011	3.312	0.013	0.012	0.440	0.441	158.6	158.6153	4910.6
158	15.7	942	0.004	0.018	3.564	1.836	0.015	3.330	0.018	0.017	0.587	0.495	178.2	178.1947	4910.6
159	15.8	948	0.003	0.014	3.578	1.847	0.011	3.344	0.013	0.012	0.440	0.509	183.1	183.1496	4910.6
160	15.9	954	0.003	0.014	3.591	1.858	0.011	3.357	0.013	0.012	0.440	0.457	164.6	164.6479	4910.6
161	16.0	960	0.003	0.014	3.605	1.869	0.011	3.371	0.013	0.012	0.441	0.445	160.1	160.0732	4910.6
162	16.1	966	0.003	0.014	3.618	1.880	0.011	3.384	0.013	0.012	0.441	0.442	159.0	158.9798	4910.6
163	16.2	972	0.003	0.014	3.632	1.892	0.011	3.398	0.013	0.012	0.441	0.441	158.8	158.7563	4910.6
164	16.3	978	0.003	0.014	3.645	1.903	0.011	3.411	0.013	0.012	0.441	0.441	158.8	158.7500	4910.6
165	16.4	984	0.003	0.014	3.659	1.914	0.011	3.424	0.013	0.012	0.441	0.441	158.8	158.7976	4910.6
166	16.5	990	0.003	0.014	3.672	1.926	0.011	3.438	0.013	0.012	0.441	0.441	158.9	158.8583	4910.6
167	16.6	996	0.003	0.014	3.686	1.937	0.011	3.451	0.013	0.012	0.442	0.441	158.9	158.9219	4910.6
168	16.7	1002	0.003	0.014	3.699	1.948	0.011	3.465	0.013	0.012	0.442	0.442	159.0	158.9859	4910.6
169	16.8	1008	0.003	0.014	3.713	1.959	0.011	3.478	0.013	0.013	0.442	0.442	159.0	159.0495	4910.6
170	16.9	1014	0.003	0.014	3.726	1.971	0.011	3.492	0.013	0.013	0.442	0.442	159.1	159.1128	4910.6
171	17.0	1020	0.003	0.014	3.740	1.982	0.011	3.505	0.013	0.013	0.442	0.442	159.2	159.1756	4910.6
172	17.1	1026	0.003	0.014	3.753	1.994	0.011	3.519	0.013	0.013	0.442	0.442	159.2	159.2379	4910.6
173	17.2	1032	0.003	0.014	3.767	2.005	0.011	3.532	0.013	0.013	0.443	0.442	159.3	159.2998	4910.6
174	17.3	1038	0.003	0.014	3.780	2.016	0.011	3.546	0.013	0.013	0.443	0.443	159.4	159.3612	4910.6
175	17.4	1044	0.003	0.014	3.794	2.028	0.011	3.559	0.013	0.013	0.443	0.443	159.4	159.4222	4910.6
176	17.5	1050	0.003	0.014	3.807	2.039	0.011	3.573	0.013	0.013	0.443	0.443	159.5	159.4827	4910.6
177	17.6	1056	0.003	0.014	3.821	2.050	0.011	3.586	0.013	0.013	0.443	0.443	159.5	159.5428	4910.6
178	17.7	1062	0.002	0.009	3.830	2.058	0.008	3.595	0.009	0.008	0.296	0.388	139.6	139.6435	4910.6
179	17.8	1068	0.003	0.014	3.843	2.069	0.011	3.608	0.013	0.013	0.444	0.374	134.7	134.7056	4910.6
180	17.9	1074	0.003	0.014	3.857	2.081	0.011	3.622	0.013	0.013	0.444	0.426	153.5	153.4667	4910.6
181	18.0	1080	0.003	0.014	3.870	2.092	0.011	3.635	0.013	0.013	0.444	0.439	158.2	158.2008	4910.6
182	18.1	1086	0.003	0.014	3.884	2.104	0.011	3.649	0.013	0.013	0.444	0.443	159.4	159.4277	4910.6
183	18.2	1092	0.002	0.009	3.893	2.111	0.008	3.658	0.009	0.008	0.296	0.388	139.8	139.7848	4910.6
184	18.3	1098	0.003	0.014	3.906	2.123	0.011	3.671	0.013	0.013	0.444	0.375	134.9	134.9098	4910.6

185	18.4	1104	0.003	0.014	3.920	2.134	0.011	3.685	0.013	0.013	0.444	0.427	153.7	153.7193	4910.6
186	18.5	1110	0.003	0.014	3.933	2.146	0.011	3.698	0.013	0.013	0.445	0.440	158.5	158.4639	4910.6
187	18.6	1116	0.002	0.009	3.942	2.153	0.008	3.707	0.009	0.008	0.297	0.388	139.7	139.6736	4910.6
188	18.7	1122	0.003	0.014	3.956	2.165	0.012	3.721	0.013	0.013	0.445	0.375	135.0	135.0108	4910.6
189	18.8	1128	0.003	0.014	3.969	2.177	0.012	3.734	0.013	0.013	0.445	0.427	153.9	153.8981	4910.6
190	18.9	1134	0.002	0.009	3.978	2.184	0.008	3.743	0.009	0.008	0.297	0.385	138.6	138.6243	4910.6
191	19.0	1140	0.003	0.014	3.992	2.196	0.012	3.757	0.013	0.013	0.445	0.375	134.8	134.8400	4910.6
192	19.1	1146	0.003	0.014	4.005	2.207	0.012	3.770	0.013	0.013	0.445	0.428	154.0	153.9646	4910.6
193	19.2	1152	0.002	0.009	4.014	2.215	0.008	3.779	0.009	0.008	0.297	0.385	138.7	138.7314	4910.6
194	19.3	1158	0.003	0.014	4.028	2.226	0.012	3.793	0.013	0.013	0.446	0.375	135.0	134.9565	4910.6
195	19.4	1164	0.002	0.009	4.037	2.234	0.008	3.802	0.009	0.008	0.297	0.372	134.0	134.0350	4910.6
196	19.5	1170	0.003	0.014	4.050	2.246	0.012	3.815	0.013	0.013	0.446	0.372	133.8	133.8377	4910.6
197	19.6	1176	0.003	0.014	4.064	2.257	0.012	3.828	0.013	0.013	0.446	0.427	153.9	153.8871	4910.6
198	19.7	1182	0.002	0.009	4.073	2.265	0.008	3.837	0.009	0.008	0.297	0.386	138.9	138.8554	4910.6
199	19.8	1188	0.003	0.014	4.086	2.277	0.012	3.851	0.013	0.013	0.446	0.375	135.1	135.1299	4910.6
200	19.9	1194	0.002	0.009	4.095	2.284	0.008	3.860	0.009	0.008	0.298	0.373	134.2	134.2201	4910.6
201	20.0	1200	0.003	0.014	4.109	2.296	0.012	3.873	0.013	0.013	0.447	0.372	134.0	134.0247	4910.6
202	20.1	1206	0.002	0.009	4.118	2.304	0.008	3.882	0.009	0.008	0.298	0.372	134.0	133.9971	4910.6
203	20.2	1212	0.003	0.014	4.131	2.315	0.012	3.896	0.013	0.013	0.447	0.372	134.0	134.0220	4910.6
204	20.3	1218	0.002	0.009	4.140	2.323	0.008	3.905	0.009	0.008	0.298	0.372	134.0	134.0492	4910.6
205	20.4	1224	0.002	0.009	4.149	2.331	0.008	3.914	0.009	0.008	0.298	0.317	114.0	113.9682	4910.6
206	20.5	1230	0.003	0.014	4.163	2.342	0.012	3.927	0.013	0.013	0.447	0.359	129.1	129.0879	4910.6
207	20.6	1236	0.002	0.009	4.172	2.350	0.008	3.936	0.009	0.008	0.298	0.369	132.9	132.8885	4910.6
208	20.7	1242	0.003	0.014	4.185	2.362	0.012	3.950	0.013	0.013	0.447	0.372	133.9	133.8695	4910.6
209	20.8	1248	0.002	0.009	4.194	2.370	0.008	3.959	0.009	0.008	0.298	0.373	134.1	134.1352	4910.6
210	20.9	1254	0.002	0.009	4.203	2.377	0.008	3.968	0.009	0.008	0.298	0.317	114.1	114.0884	4910.6
211	21.0	1260	0.003	0.014	4.217	2.389	0.012	3.981	0.013	0.013	0.448	0.359	129.2	129.2406	4910.6
212	21.1	1266	0.002	0.009	4.226	2.397	0.008	3.990	0.009	0.008	0.299	0.370	133.0	133.0488	4910.6
213	21.2	1272	0.002	0.009	4.235	2.405	0.008	3.999	0.009	0.008	0.299	0.316	113.9	113.8732	4910.6
214	21.3	1278	0.003	0.014	4.248	2.416	0.012	4.013	0.013	0.013	0.448	0.359	129.3	129.2569	4910.6
215	21.4	1284	0.002	0.009	4.257	2.424	0.008	4.022	0.009	0.008	0.299	0.370	133.1	133.1226	4910.6
216	21.5	1290	0.002	0.009	4.266	2.432	0.008	4.031	0.009	0.008	0.299	0.317	113.9	113.9471	4910.6
217	21.6	1296	0.003	0.014	4.280	2.444	0.012	4.044	0.013	0.013	0.448	0.359	129.3	129.3443	4910.6
218	21.7	1302	0.002	0.009	4.289	2.452	0.008	4.053	0.009	0.008	0.299	0.370	133.2	133.2131	4910.6
219	21.8	1308	0.002	0.009	4.298	2.459	0.008	4.062	0.009	0.008	0.299	0.317	114.0	114.0243	4910.6
220	21.9	1314	0.002	0.009	4.307	2.467	0.008	4.071	0.009	0.008	0.299	0.303	109.2	109.2425	4910.6
221	22.0	1320	0.002	0.009	4.316	2.475	0.008	4.080	0.009	0.008	0.299	0.300	108.1	108.0624	4910.6
222	22.1	1326	0.003	0.014	4.329	2.487	0.012	4.093	0.013	0.013	0.449	0.355	128.0	127.9793	4910.6
223	22.2	1332	0.002	0.009	4.338	2.495	0.008	4.102	0.009	0.008	0.299	0.369	133.0	132.9775	4910.6
224	22.3	1338	0.002	0.009	4.347	2.502	0.008	4.111	0.009	0.008	0.299	0.317	114.0	114.0494	4910.6
225	22.4	1344	0.002	0.009	4.356	2.510	0.008	4.120	0.009	0.008	0.299	0.304	109.3	109.3325	4910.6
226	22.5	1350	0.002	0.009	4.365	2.518	0.008	4.129	0.009	0.008	0.299	0.300	108.2	108.1682	4910.6
227	22.6	1356	0.002	0.009	4.374	2.526	0.008	4.138	0.009	0.008	0.299	0.300	107.9	107.8921	4910.6
228	22.7	1362	0.002	0.009	4.383	2.534	0.008	4.147	0.009	0.008	0.300	0.300	107.8	107.8379	4910.6
229	22.8	1368	0.002	0.009	4.392	2.542	0.008	4.156	0.009	0.008	0.300	0.300	107.8	107.8392	4910.6
230	22.9	1374	0.002	0.009	4.401	2.549	0.008	4.165	0.009	0.008	0.300	0.300	107.9	107.8542	4910.6
231	23.0	1380	0.002	0.009	4.410	2.557	0.008	4.174	0.009	0.008	0.300	0.300	107.9	107.8727	4910.6
232	23.1	1386	0.002	0.009	4.419	2.565	0.008	4.183	0.009	0.008	0.300	0.300	107.9	107.8919	4910.6
233	23.2	1392	0.002	0.009	4.428	2.573	0.008	4.192	0.009	0.008	0.300	0.300	107.9	107.9112	4910.6
234	23.3	1398	0.002	0.009	4.437	2.581	0.008	4.201	0.009	0.008	0.300	0.300	107.9	107.9305	4910.6
235	23.4	1404	0.002	0.009	4.446	2.589	0.008	4.210	0.009	0.008	0.300	0.300	107.9	107.9497	4910.6
236	23.5	1410	0.002	0.009	4.455	2.597	0.008	4.219	0.009	0.008	0.300	0.300	108.0	107.9689	4910.6
237	23.6	1416	0.002	0.009	4.464	2.605	0.008	4.228	0.009	0.008	0.300	0.300	108.0	107.9880	4910.6
238	23.7	1422	0.002	0.009	4.473	2.612	0.008	4.237	0.009	0.008	0.300	0.300	108.0	108.0070	4910.6
239	23.8	1428	0.002	0.009	4.482	2.620	0.008	4.246	0.009	0.008	0.300	0.300	108.0	108.0259	4910.6
240	23.9	1434	0.002	0.009	4.491	2.628	0.008	4.255	0.009	0.008	0.300	0.300	108.0	108.0447	4910.6
241	24.0	1440	0.002	0.009	4.500	2.636	0.008	4.264	0.009	0.008	0.300	0.300	108.1	108.0634	4910.6
														Max Storage Req=	4910.6 C.F.